Ca' Foscari
University
of Venice

Master's Degree programme
In Languages, Economics and
Institutions of Asia and North Africa
Second cycle (D.M. 270/2004)

Final Thesis

The different ways to enter the Chinese market and the management of the related financial risks

Supervisor
Ch. Prof. Giorgio Stefano Bertinetti

Assistant supervisor
Ch. Prof. Anna Morbiato

Graduand
Martina Gregori
Matriculation Number 861677

Academic Year
2017 / 2018

前言

世界各地的公司都认为中国是一个有趣的投资目的地。在当今全球化的市场中，公司正在发展中国家寻找新的机会。由于中国是世界第二大经济体，我不知道它是否仍然可以被定义为发展中国家。中国是世界上人口最多的国家, 拥有近十四亿人，并且是世界上增长最快的经济体之一; 因此代表了一个极具吸引力的市场。其经济增长的起源可以追溯到二十世纪七十年代。自一九七八年以来，中国政府为了吸引外国投资，进行了一些‘公开市场’改革。其中最重要的是邓小平发起的“门户开放政策”。邓小平意识到中国需要西方的技术和投资，从而为外国企业打开了大门。这个政策启动了现代中国的经济转型。

进入中国市场已成为各种形状和规模的意大利公司面临的最大挑战之一。虽然在中国市场做生意可以提高盈利能力和公司的价值，但是愿意在完全不同的市场中运营的公司将不得不面对几个问题，例如选择市场进入模式。后者是这篇论文的主题之一。

这篇论文的目的在于解释进入中国市场的不同方式和相关经融风险的管理。本文一共四章组成。

第一章介绍进入中国市场的主要策略。这些策略包括: 直接出口、间接出口、许可和特许经营、外商投资经营企业、中外合资经营企业、中外合作经营企业以及利用香港进入中国大陆。根据其优点和缺点，我们将分析每种市场进入模式。进入国外市场的进入模式的选择对公司国际业务的成功或失败有很大影响。不同的市场进入模式意味着不同的资源承诺和不同的控制程度。此外，利用中外合资经营企业和中外合作经营企业战略的公司有另一个问题，也就是说它们承担合资伙伴剥夺公司在技术诀窍方面的优势的风险。例如，使用出口战略的公司和在中国拥有自己的子公司的公司的资源承诺完成不一样。第一家公司的资源承诺低于第二家公司的资源承诺。然而，中国领土上的分公司可以更好地控制公司的国际运营。第一章还考虑一九七九年邓宁提出的“OLI 理论”。根据该理论，国外市场进入模式的选择受到三种因素的影响。这三种因素是: 所有权优势、区位优势和市场内部化优势。本章还讨论这三个因素的影响和相互关系。

市场进入模式选择是一项战略决策。但是，这种战略选择也会影响公司的财务管理。财务影响是本论文第二章的核心主题。在中国做生意意味着使用与意大利货币不同的货币。所以，意大利公司必须承担的重大风险之一是外汇风险。外汇风险非常重要。所有公司都应该考虑未来汇率波动的潜在影响; 这可能给公司带来利润或损失。在国外市场工作的公司的财务

业绩不仅取决于外汇风险，还取决于公司经营所在国家的税制。因此，第二章介绍中国和香港的不同税制，并且考虑转让定价这种问题。

在国外市场一家公司的业绩受到几个因素的影响。这篇论文的第三章解释这些因素是哪些。这些因素包括: 管理风险的态度和公司经验、地方竞争和外国竞争、利润率、销售量、售后服务、公司规模和公司的风险承受能力。我把所有这些因素分为三组: 第一组是公司的资本可用性; 第二组是产品的质量; 第三组是公司在国外市场的经验。通过这三个参数，我建立了一个有用的公式。该公式计算公司的风险。根据这个公式，公司的资本可用性、产品的质量和公司的经验与风险成反比。如果一家公司的资本和经验以及它产品的质量提高，他面临的风险就会降低。

最后，这篇论文的第四章提供一些在中国做生意的意大利公司的例子。我们将讨论这些公司在中国市场的进入模式，并分析它们享受的优势及需要克服的困难。参与这项研究的五家公司都属于同样的行业，即橡胶行业。这就使我们能够突出所有这些意大利公司的共同点。这些公司向世界各地出口橡胶制品。它们的成功源于一个简单的产品，但它是许多产品的关键组成部分。因为这些公司比较小并它们的资源有限，所以专注于产品的质量，以在中国市场取得成功。

INDEX

INTRODUCTION

China is considered to be an interesting investment destination by companies all over the world. In today's globalized markets, companies are looking for new opportunities in developing countries. Since China is the second-largest economy in the world, I do not know if it can still be defined as a developing country. With a population of almost 1.4 billion people, China is one of the world's fastest growing economies; thus, represent a high attractive market. The origins of its economic growth date back to the seventies of the twentieth century. Since 1978, the government, in order to attract foreign investments, issued some 'open market' reforms. The most important one is the 'Open Door Policy' initiated by Deng Xiaoping, who realized that China needed Western technology and investments, and thus opened the door to foreign businesses.[1] This policy set into motion the economic transformation of modern China.

Entering the Chinese market has become one of the biggest challenges also for Italian companies of all shapes and sizes. Although doing business in the Chinese market can increase the profitability and consequently the value of a company, companies willing to operate in a completely different market will have to face several issues, such as the selection of the entry mode, that is one of the topic on which this study focuses.

With the aim of exploring the different ways to enter the Chinese market and the management of the related financial risks, this study is divided into four chapters.

The first chapter starts with an overview of the main strategies for entering the Chinese market. Such strategies include: exporting, licensing and franchising,

[1] Bbc.com, "Open Door Policy", URL: http://news.bbc.co.uk/2/shared/spl/hi/asia_pac/02/china_party_congress/china_ruling_party/key_people_events/html/open_door_policy.stm

wholly foreign-owned enterprises (WFOE), joint ventures (JV), and using Hong Kong as entry to mainland China. Each entry mode will be analyzed according to its advantages and disadvantages. The choice of entry mode into a foreign market has a strong impact on the success or the failure of the firm's international operation. Different entry modes imply different resource commitments, degree of control and dissemination risk.[2] For example, the resource commitment of a company using the exporting strategy is much lower than that of a company which has its own subsidiary on the Chinese territory; but at the same time the latter benefits from a greater control over the company's operations. Chapter one takes also in consideration the framework proposed by Dunning in 1979: the 'Eclectic Paradigm'. This is a further development of the internationalization theory which states that the choice of the entry mode is influenced by three types of factors: ownership advantages, location advantages and internalization advantages. The section dedicated to this topic will describe the effects and the interrelationships of these factors.

The entry mode selection process is a typical strategic decision. However, such strategic choice has also implications on the financial management of the company. Such financial implications are the central topic of the second chapter of this study. Doing business in China means also dealing with a currency different from the Italian one; thus, one of the relevant risks that Italian companies have to bear is the foreign exchange risk. The establishment of the business strategy should take into consideration the potential effects of the future exchange rate fluctuations which may bring profits or losses to the company. The financial performance of a company working in a foreign market does not depend only on the foreign exchange risk, but also on the tax system of the country in which it operates.

[2] Dissemination risk refers to the risk that firm-specific advantages in know-how will be expropriated by a licensing or joint venture partner. [Hill and Kim, "An Eclectic Theory of the Choice of International Entry Mode", 1990].

Therefore, chapter 2 explores the different tax systems of China and Hong Kong, including a consideration on the transfer pricing issue.

Chapter 3 focuses, with particular attention to the Chinese context, on the drivers that affect the companies' performances in foreign markets. These drivers are: management risk attitudes and company's experience, competition, profit margin, sales volume, after-sales service, company size and corporate risk tolerance. Later, all these drivers have been grouped in three main areas (the company's capital availability for a project, the perception of the quality of the product in the market, and the experience of the company in foreign markets) that have been used as parameters to build a useful analytic formula to calculate a company's risk. According to this formula, the company's capital availability, the quality of the product and the firm's experience are inversely proportional to the risk.

Finally, the last chapter of this study offers insights into how some Italian companies are facing the Chinese market. Focusing on their entry modes, we will discuss which are the advantages they enjoy, and which are the challenges they have to overcome. The five firms involved in the research are all small companies that belong to the same industry; i.e. the rubber industry. This will allow us to highlight the aspects that all these Italian companies have in common. These firms export rubber articles all over the world; and their success is built through a seemingly simple product, which nevertheless represents a critical component for many productions. Given their small size and the limited resources, these companies focus on product quality in order to achieve successful results in China.

The thesis also includes an abbreviation list and a glossary, which contains in *pinyin* and in Chinese some relevant terms; thus, supporting the reader in understanding this study.

CHAPTER 1: WAYS TO ENTER THE CHINESE MARKET

Entering the Chinese market has become one of the most important challenges of Italian companies of all shapes and sizes. In the last decades China's economy has continued to grow becoming an engine of global growth. Therefore, understanding how to enter such a large and complex market is a critical issue that companies have to face.

This chapter aims at explaining the different alternatives available to the companies wishing to enter the Chinese market.

Five main ways of market entry can be identified: exporting, licensing and franchising, wholly owned subsidiary, joint ventures, and using Hong Kong as entry to Mainland China.

In the next section, I will discuss the existing differences between the various entry modes and the related advantages and disadvantages.

1.1 Exporting

Generally, the first step taken by a company to enter the international market is export. Exporting can be divided into two categories: direct exporting and indirect exporting.

We can define direct exporting the shipment of goods, provision of service from one country to another directly to the final customer. We refer to the seller of such goods as the "exporter", whereas we refer to the overseas-based buyer as the "importer".

Indirect exporting involves the participation of a third part. The exporter sells goods to an intermediary based in the target market (in this case, the Chinese market), who in turn sells goods to the end customer. The figure of the intermediary can be represented by an agent or a distributor.

An agent is your company's direct representative and is normally paid a monthly management fee and a commission to help represent you and your product.
A distributor buys your products and then sells them to customers. Their income comes from the difference between the buying and selling price.[3]
Entering the Chinese market through agents or distributors can help small and medium-sized companies; this is due to the fact that intermediaries have the knowledge and the contacts to push for the sale of the products and they can be useful in overcoming language and culture barriers. Agents and distributors are the eyes and the ears on the ground, i.e. they can continuously adjust to policy and regulation updates, collect market data and quickly respond to change.[4] However, finding a reliable agent or distributor is a time-spending activity. The exporting company should check the references, the experiences, the soft skills, the strong networks and work ethic of the intermediary in order to avoid the decrease of the company sales. Company should also verify whether its agent represents any other companies.
The strengths and weaknesses of exporting as entry strategy are listed below.
First, this entry mode requires a low initial investment, and this is a relevant factor for small, medium-sized companies that do not have substantial capital to invest. Second, exporting allows the exporter to reach customers quickly and to receive more direct feedback on the company's product and its performance in the marketplace. Moreover, customers feel more certain in doing business directly with the exporter. Third, is possible to achieve scales economies, to minimize the risk and to diversify markets.
One the other hand, dealing directly with the importer means also face some potential costs of trade barriers, such as transportation costs and tariffs. The company should be involved in all the logistics of the transaction (licenses, standards, certification, labelling, etc.), and this leads to a higher degree of

[3] EU SME Centre Report, "Ways to enter the Chinese market", 2015
[4] Ibid.

responsibility from every level of the exporting organization.[5] Additionally, direct exporting does not allow the company to exercise a complete control over commercialization of products and the exporter can have some difficulties to respond to customer needs well due to distance. So, the negative side of avoiding setting up in China and export directly, is that you have the duty to do your own market research and carry out all the necessary administrative requirements, such as ensuring that the goods or services can first enter the market and then meet the required standards.

The organization can solve this kind of problems through the use of intermediaries. An agent will be able to report on competition, will focus on the products with the highest margin, and will advise the organization on new products to be launched. However, a lot of communication is needed to control the work of an agent. Working with agents can be quite risky in the case the company decides to end the collaboration; a potential consequence the company has to consider is the possibility for the agent to go to the competition.

In China is not recommended to have only one distributor for the whole territory. First, because the company will be completely in the hands of its sole partner; second, because it will be difficult to execute. The territory of China is so extended that only a few companies may claim they have a distribution network covering all of China.

Particular attention should be paid to a fairly common phenomenon in China. Some foreign organizations sell consciously (or unconsciously) their products to people working on the black market. These people relying on personal connections can smuggle products into the mainland. Thus, companies have to be sure that there are not any illegal trading activities implications. [6]

Which is more important, a low initial investment or a higher degree of control on the business activity? It is a question of striking a balance.

[5] EU SME Centre Report, "Ways to enter the Chinese market", 2015

[6] Ibid.

1.2 Licensing and Franchising

Licensing refers to the activity with which the licensor grants the licensee the right to use a patent, a trademark, a certain know-how or a fundamental element for the production and / or the marketing of a product or a service. We refer to the owner of Intellectual Property Rights as Licensor, and to the party who receive such IPR as licensee.

The intellectual property can be a significant competitive advantage for a company, and as the company grows and develops a good reputation for the product's quality, its intellectual property becomes more and more valuable.[7]

Franchising is the contract by which a company grants the right to sell its product or services using its name or brand name to another company, subject to payment of a fee. Thus, in this system at least two levels of individuals are involved:

- The franchisor: the company who lends its trademark or its business model;
- The franchisee: the company who pays the fee in order to benefit the right to do business under the franchisor's name and model.

Before entering in any form of franchising or licensing, companies are strongly recommended to verify that their Intellectual Property Rights are registered both in their home country and in China.

Nowadays, licensing and franchising are no longer only for multinational corporations or niche-market businesses that have popular products or services, and the Chinese licensing market is one of the world's fastest increasing. But, all licensing contracts must be approved and registered by the Ministry of Commerce.[8]

Regarding franchising, in 2007 China's State Council published the revised Regulation and Administration of Commercial Franchise. According to this document, both foreign and domestic companies who want to engage in

[7] EU SME Centre Report, "Ways to enter the Chinese market", 2015
[8] Ibid.

commercial franchising in China are required to comply some rules. The regulation states that only enterprises, i.e. not individuals, can engage as franchisors. Such franchisor must provide technology support, business trading and a long-term commitment. [9]

Usually, a franchise agreement has a three years validity, unless the parties agreed to terminate it earlier.

Since the Chinese market is different from the European one, Italian companies that want to engage in a franchise process should take into consideration the following advices.

When entering China, is better for the company to register the company name and trademark. There is the real risk that competitors try to register your trademark for themselves, so an official registration can help the company to avoid critical situations.

Then, the company should choose the right franchise partner. A local partner able to navigate the local business environment increases the value of the partnership. Channels of distribution, business connections and good relationship with the government help in cutting costs and overcoming barriers.

A further tie is to adjust market access strategy according to cultural differences. A foreign franchiser has to fine tune products and services to meet different habits. For example, McDonalds has developed special products for the tastes of their Chinese consumers.

As every entry mode, licensing and franchising have positive and negative aspects. With a licensing or franchising agreement there is no need for the company to build any plant or distribution network; this allows to reduce the costs of market entry.

The licensing/ franchising company's brand is exposed to a wider advertising; as consequence, the company can count on the impact of the brand or the good reputation.

[9] EU SME Centre Report, "Ways to enter the Chinese market", 2015

Through this entry strategy the company has the possibility to increase its business opportunities. For example, collecting the royalty payments from the company to whom the license is granted increases the revenues of the company; and the capabilities and knowledge of the local franchisee can help the company to find new partners and reach new markets.

Moreover, the company does not need to motivate the franchisee, who is generally self-motived for having invested a lot of time and money in the business.[10]

Entering in a new market with a powerful licensee means also having the possibility to discourage competitors and imitators. Another relevant advantage is that by multiplying the number of locations through the investments of other people, the company is able to spread risks.

Although the numerous benefits, organizations should also consider the negative implications of these two strategies.

According to the EU SME Center Report the main obstacles of this entry mode are that by disclosing its business model, the company runs the risk that franchisees amend such model and establish their own business, and in case of negligence the company can face the problem of Intellectual Property Rights infringement. Besides these factors, the organization exercises a limited control over the business model, so it is very important to ensure the existence of proper control provisions. Despite the company does not have to implement huge sums of money for its own private establishment in the host country, it is also true that the company is engaged in a significant initial investment in terms of staff training, technical assistance, etc.

In the next section we will discuss wholly foreign-owned enterprises as market entry strategy.

1.3 Wholly Foreign-Owned Enterprise (WFOE)

[10] EU SME Centre Report, "Ways to enter the Chinese market", 2015

A wholly foreign-owned enterprise (*waishang touzi jingying qiye,* 外商投资经营企业), commonly known as WFOE, is a limited liability company wholly owned by one or more foreign investors.

The wholly foreign-owned enterprise is a common investment vehicle, and its unique feature is that involvement of a mainland Chinese investor is not required, unlike most other investment vehicles (for example the sino-foreign joint venture that we will describe in the next section).

According to WFOE regulations, "foreign investors are permitted to set up a 100% foreign-owned enterprise in industries that are conductive to the development of China's economic benefits, and not prohibited or restricted by the Chinese government." [11] For further information, foreign investors should consult the Articles of Association, the document that mentions exactly how wholly foreign-owned enterprises can operate.

In China, WFOEs were originally conceived for encouraged manufacturing activities that were export oriented or introduced advanced technology. However, after China's entry into the World Trade Organization, these conditions were gradually abolished and WFOEs are increasingly being used for service providers such as a variety of consulting and management services, software development and trading as well. So, any enterprise in China which is one hundred percent owned by a foreign company or companies can be defined as wholly foreign-owned enterprise.

I have to point out that companies that want to engage in trading, retail and distribution of imported goods can do this under a WFOE, but, must be registered as foreign-invested commercial enterprise (FICE), a particular type of wholly foreign-owned enterprise.

Business license is the key official document of the WFOE, thus in order to complete the registration of a WFOE a license is needed.

[11] EU SME Centre Report, "Ways to enter the Chinese market", 2015

According to The Law of the People's Republic of China on Enterprise Income Tax of 2008, foreign-owned enterprises are normally subject to a twenty-five percent corporate income tax, but some industries still enjoy a lower rate. Tax rates are applied on the basis of the location of the company, the industry the company belongs to, the profitability and the size. For example, generally a corporate tax income tax of twenty percent is applied to small companies. Where applicable, wholly foreign-owned enterprises are additional subject to consumption, value added, business and import and export taxes.

Chinese government allows Foreign Invested Enterprises remit their profits out of the country and such remittances do not require the prior approval of the SAFE, the State Administration of Foreign Exchange. If the losses of previous years have not been covered, dividends cannot be distributed and repatriated to overseas; while dividends not distributed in previous years may be distributed together with those of the current year. Repatriating the registered capital to home country is forbidden during the term of the business operation.

In terms of duration, generally a WFOE's typical life span is between fifteen to thirty years. In cases where projects in which the amount of investment is large, the return of investment is low, the construction period is long, projects producing sophisticated products using advanced or key technology provided by the foreign partner, or for projects producing internationally competitive products is also possible to obtain a duration extension, even up to fifty years.

One of the problem related to this entry mode is the choice of the official name of the enterprise. The name of a WFOE in China should be in Chinese, and this could be an obstacle for Italian companies that decide to enter this market. The use of the world 'China' or 'International' in the Chinese name implicates an increase of the minimum capital, so companies should try to avoid these words, although they are permitted in the non-Chinese name. The Chinese name of the WFOE should include four types of information, i.e. first the company name/product; second the

activity (for example: business consulting); third the location or the name of the city and fourth the company structure (for instance: Co., Ltd.).[12]

Wholly foreign-owned enterprises are one of the most popular entry modes for non-PRC investors due to their versatility advantages. Such advantages first of all include the possibility to uphold a company's global strategy without the interference of Chinese partners as may occur in the case of joint ventures; this means an exclusive management control over all decisions and profits.

Others relevant positive aspects are the ability to protect the intellectual know-how and technology and the ability to fully monitor human resources. The first ability helps the company to operate more safely and the second allows the company to reach a greater efficiency in management development.

Moreover, for manufacturing WFOEs there is no need of special requirements for import/export license for its own products.

There are two additional key features of a WFOE. The first is the ability to formally carry out businesses rather than just function as a representative office and the ability to issue invoices to its customers in RMB and receive revenues in RMB. The second is the capability of converting RMB profits into another currency for remittance to its parent company outside of China.[13]

The disadvantages of establishing a WFOE include the inability to engage in some restricted business activities, limited access to government support and a potentially steep learning curve upon entering the mainland Chinese market. Since a WFOE is a type of limited liability company, it requires the injection of foreign funds to make up the registered capital, something not required with a representative office.

1.4 Joint Venture (JV)

[12] WFOE Organization: Wholly Foreign Owned Enterprise, URL: http://www.wfoe.org/

[13] EU SME Centre Report, "Ways to enter the Chinese market", 2015

Another method often used to entry the Chinese market is the establishment of a joint venture. A joint venture (JV) is a business arrangement in which two or more parties agree to pool their resources for the purpose of accomplishing a specific task.

With the introduction of China's "Open Door" policy over three decades ago, joint ventures were the initial investment vehicle used by foreign investors, not by choice but by obligation. The primary aim of this vehicle was to transfer advanced technology and management techniques from foreign companies to the enterprises owned by the state. In return, foreign investors could enjoy various benefits, for example an easier access to Chinese market and suppliers and lower operational costs and investment.

Nowadays alternative investment vehicles, such as WFOEs, are available for foreign investors; but some project still require the involvement of Chinese partners. For instance, foreign investors that want to engage in restricted industries in China have only the option of the joint venture. Such industries include: telecommunications, auto manufacturing and life insurance.

There are two types of joint ventures in China:

- The equity joint venture (EJV, *zhongwai hezi jingying qiye*, 中外合资经营企业)
- The cooperative joint venture (CJV, *zhongwai hezuo jingying qiye*, 中外合作经营企业)

Both types require the drafting and the agreement of a joint venture contract between the Chinese part and the foreign part. This contract specifies in detail the rights, the interests and the responsibilities of each partner.

Here below we will analyze the two types of JVs.

1.4.1 Equity Joint Venture (EJV)

An equity joint venture is a Chinese legal person with limited liability. It is established on the basis of a joint venture contract between the Chinese part and the foreign one after approval by the MOFCOM, the Ministry of Commerce, or its local counterpart, and other relevant departments.

Equity joint ventures are governed by the Law of the People's Republic of China on EJVs Using Chinse and Foreign Investment. This law was first promulgated in 1979.[14]

Companies involved in an EJV share both risks and revenues on the basis of the respective registered capital contributions. According to the EJV Law, the foreign investor's capital must account for at least twenty-five percent of the registered capital. Generally, there is no upper limit on the foreign partner's contribution; but there are some restricted industries in which Chinese party is required by the Chinese Law to have control over the joint venture; in such case is not possible for the foreign investor to own more the forty-nine percent.[15]

Obviously, also profit is distributed in form of dividend to the parties in proportion to each party's respective ownership interest.

Capital contribution may be made in form of cash, industrial property rights, capital goods and other assets. Generally, foreign investor contributes cash, technology, construction material, machinery and equipment; while the Chinese part makes land, cash and clearance fees available.

1.4.2 Cooperative Joint Venture (CJV)

A cooperative joint venture is a partnership between a Chinese enterprise or organization and a foreign enterprise, organization or individual. A CJV can have a form partnership based on an incorporated arrangement with a limited liability company or be based on contractual cooperation arrangement (real CJV). [16]

---

[14] Interchinaconsulting.com, "Establishment of a Joint Venture (JV) in China", URL: https://www.caixabank.es/deployedfiles/particulars/Estaticos/PDFs/InfolineaAbierta/JVinChina.pdf

[15] EU SME Centre Report, "Ways to enter the Chinese market", 2015

[16] Ibid.

In case where a CJV is formed as a limited liability company, then the CJV owns all of the contribute assets, and the liabilities of the investors would be limited to contributions made to the registered capital of the CJV.

If the CJV is established without forming a new "legal person" separate from its investors (real CJV), the contributions remain the property of the partners and the income generated becomes the joint property of the partners.[17]

The difference between equity joint ventures and cooperative joint ventures is that the parties of both types of cooperative joint ventures have freedom to decide their respective obligations, rights, risks, liabilities, management and ownership of the property at the time of termination of the CJV.

Although cooperative joint ventures were initially designed as a legal framework for companies to work together in China on a contract-per-contact basis, CJVs have become more attractive to foreign investors for other reasons, for example the profit sharing is not required to be proportionate to the contribution by each party.

When considering investment options, foreign investors need to take into account the advantages and disadvantages of having a Chinese partner.

A joint venture can present advantages when it comes to gaining access to an already developed network of distributors, the desire to share operational costs and the need for a strategic local partner.

Naturally, having a Chinese partner means that the foreign company, which is unfamiliar with doing business in a new different market, can benefit from Chinese part 'support. Those benefits include obtaining access to marketing and distribution channels, obtaining government approvals, labor recruitment, sourcing raw materials and acquiring land and production facilities. The other side of the coin is the difference in business cultures between the two parties, thus consequently there may be some divergences in terms of objectives and

[17] Interchinaconsulting.com, "Establishment of a Joint Venture (JV) in China", URL: https://www.caixabank.es/deployedfiles/particulars/Estaticos/PDFs/InfolineaAbierta/JVinChina.pdf

expectations for their common project; and even where objectives coincide, battles over strategy and management control are really frequent.

Another obstacle in having a Chinese partner is related to the due diligence. Sometimes foreign investors tend to underestimate the importance of the investigations on their potential Chinese partner. And even if foreign investors carry out investigations, little problems must be overcome. The most common problems encountered during due diligence investigations are poor transparency and inadequate documentation.

Moreover, foreign investors should also pay attention to the exposure to IPR infringement. China's IPR legislation is fairly well developed in China, however IPR infringement is quite common. There is a lack of support for IPR enforcement at the local level, partly due to widespread local protectionism and partly due to endemic corruption. As result, sometimes IPR offenders are relatively unhindered in their operations. As foreign investors typically have high quality products, valuable brands and registered patents and copyrights, IPR infringement is extremely damaging to them.[18]

1.4.3 Joint Venture vs Wholly Foreign-Owned Enterprise

After having analyzed wholly foreign-owned enterprises and joint ventures as strategies for entering the Chinese market, this paragraph aims at providing a comparison between the two strategies through a summary table.

[18] Interchinaconsulting.com, "Establishment of a Joint Venture (JV) in China", URL: https://www.caixabank.es/deployedfiles/particulars/Estaticos/PDFs/InfolineaAbierta/JVinChina.pdf

Advantages JV over WFOE	Disadvantages JV over WFOE
Fewer restriction on project approval.	Need to do proper diligence on and negotiate a JV contract with a Chinese partner in China.
Upfront investment required from the foreign investor likely to be lower for a JV, as shared with the JV partner.	Risk of inheriting the 'baggage' of the JV partners, such as excess workers, poor reputation, etc.
Assistance from the Chinese partner for government approvals, labor recruitment, sourcing raw materials, acquiring land, etc.	Possible partner disputes due to the absence of unilateral control.
Reduction of investment risks due to the transfer of existing customers and sales contracts from the partner to the JV.	The JV will effectively be a going concern, so there will be less control over corporate culture than with a WFOE.
Running more quickly than a WFOE.	A JV presents a higher risk exposure to IPR infringement and even 'arming' a future competitor with know-how, trade secrets etc.
Can be the first step to acquire the JV partner.	

Source: interchinaconsulting.com

1.5 Using Hong Kong as Entry to Mainland China

The fifth strategy to enter the Chinese market is to use Hong Kong as entry to mainland China.

In 1997 Hong Kong was returned to China and since then it has been administrated as a Special Administrative Region (SAR) by mainland China. A 'one country, two systems' policy is used, i.e. Hong Kong is allowed to continue to maintain its favored legal and economic structure. English remains an official language and Hong Kong is still one of the most liberal market-based economies in the world. So, today Hong Kong represent a gateway to do business in China.[19]

Nowadays, most of European small, medium-sized enterprises enter China directly bypassing Hong Kong, particularly if they are exporting. But according to the sector, the size of the company and the nature of the business, some European SMEs should not underestimate the idea of having a legal entity in Hong Kong.

Which are the advantages and disadvantages of this strategy? Below are listed some reasonable drivers for setting up a company in Hong Kong:

- Having a holding company can help and protect the parent company from any negative legal issues that may arise in mainland China.
  Compared to China, in Hong Kong there is a more predictable regulatory framework with less frequent changes in regulation.
- Using a Hong Kong shell company in order to set up a representative office in China (which requires an office outside of China). This is necessary for European entrepreneurs in China without an office in Europe.
- The foreign investor can benefit from some tax/financial systems, such as easier repatriation of the profit and a lower corporate tax.
  In Hong Kong there is a simple tax system: there are no capital gains tax, inbound or outbound dividend is not taxed, VAT or sales tax, estate duty and compared to China, there is a lower corporate income tax.

[19] EU SME Centre Report, "Ways to enter the Chinese market", 2015

- The establishment of a legal entity in Hong Kong requires less time than the establishment in mainland China. (two weeks versus at least three months).[20]

Naturally foreign investors have also to consider the negative aspects of this strategy. For example, the tax implications: a company registered in Hong Kong but conducting business in China constitutes a non-compliance with Chinese tax regulations.

In January 2004 came into effect the China and Hong Kong's Closer Economic Partnership Arrangement (CEPA). The CEPA is a bilateral free trade agreement between mainland China and Hong Kong. Under this document, China agreed to eliminate tariffs for all the products of Hong Kong origin and allows preferential treatment to Hong Kong service suppliers in some service sectors. Foreign companies registered in Hong Kong are allowed to benefit from the rules provided by CEPA. However, foreign investor should pay attention because products that do not originate in Hong Kong cannot benefit from the Closer Economic Partnership Arrangement.[21]

How to choose the most suitable entry strategy? This is the question foreign investors have to ask themselves before taking any actions and after having considered the pros and cons of available options. In the next section of this chapter we will try to answer such question.

1.6 How to Choose: The Eclectic Theory

If the first step of the internationalization process is to decide to enter a foreign market, the following step is to determine the appropriate way to organize the foreign business activities.

[20] EU SME Centre Report, "Ways to enter the Chinese market", 2015
[21] Ibid.

Each strategy described above has different implications on the resources a company has to commit to the foreign operations, on the risk to bear abroad and on the degree of control that the company can exercise.

A careful analysis of the Chinese context is a necessary condition for companies for taking such a difficult decision; however, the choice of the entry mode can determine the success or the failure in the foreign country.

Through the existing literature we can figure out that there are a lot factors influencing the choice of entry mode; such factors include: country familiarity, country risk, the stage of country development, technology and transaction costs. In this confusing scenario, managers have a clear need of a unified framework within which all these factors can be placed.[22]

With the aim to focus on integrative perspectives, this study offers an analysis of the comprehensive framework proposed by John H. Dunning in 1979. The British economist published The Eclectic Paradigm, also known as OLI-Model or OLI-Framework. The theory, that is a further development of the internationalization theory, states that the choice of the entry mode in a foreign market is influenced by three types of determinant factors: ownership advantages of a firm, location advantages of a market and internalization advantages of integrating transactions within the company.[23]

The ownership advantage refers to a firm's specific assets (valuable brands, technologies, production processes, etc.)

The location advantage refers to a location's combination of sales opportunities and investment risk.

The internalization advantage refers to the benefits of retaining a core competency within the company rather than licensing, outsourcing or selling it.

Although it is something of a simplification, below a summary table helps to have an easier picture of the situation:

---

[22] Hill C.W.L., Hwang P., Kim W.C., "An Eclectic Theory of the Choice of International Entry Mode", 1990

[23] Dunning, "Toward an Eclectic Theory of International Production: Some Empirical Tests", 1980

	Ownership advantages	Location advantages	Internalization advantages
Licensing	Yes	No	No
Exporting	Yes	No	Yes
Foreign Direct Investments	Yes	Yes	Yes

Normative decision theory suggests that the choice of a foreign market entry mode should be based on trade-offs between risks and returns. A firm is expected to choose the entry mode that offers the highest risk-adjusted return on investment. However, behavioral evidence indicates that a firm's choice may also be determined by resource availability and need for control [Cespedes, 1988]. Resource availability means the financial and managerial capacity of a company to serve a particular foreign market; while control refers to the need of the company to gain leverage over methods, systems and decision in that foreign market.

Entry mode decisions are generally a compromise among these four attributes (risk, return, resources and control). The exporting strategy requires a low investment in terms of resources and as consequence low risk and return alternatives. The foreign exporter enjoys the operational control; but, the mode lacks in providing marketing control. The licensing strategy means low resource investment, low risk and return alternatives which provides least control to the licensing company. The sole venture strategy requires a high investment of resources and this leads to high risk and return alternatives; this method grants to the investing company a high degree of control. The joint venture strategy implies a relatively lower investment than the sole venture mode and risk, return and control are in proportion to the participation of the investing company in the joint venture contract.[24]

Below will be described the main effects of these factors.

[24] Agarwal, S. & Ramaswami, S.N., "Choice of Foreign Market Entry Mode: Impact of Ownership, Location and Internalization Factors", 1992

1.6.1 Ownership Advantages

When a company enters a foreign market, it has to face a great number of competitors and has to understand how to behave in relation to them. The condition that allows the investing firm to compete with host country companies in their own market is be in possession of superior assets and skills. Through these factors the company can earn economic rents that are high enough to counter the higher cost of serving the market. Generally, the asset power of a company is denoted by its size and multinational experience; and skills are reflected by its ability to produce differentiated products. Companies need asset power to undertake an international expansion and to successfully compete with host country firms. Company size depends on sales volume, total assets, employee size and domestic market sales. To absorb the high costs of marketing, to enforce contracts and patents and to achieve economies of scale, the company needs resources [Agarwal and Ramaswami, 1992]. Therefore, a large company can get a better result than a small or medium-sized one. In other words, the size of the company is expected to be positively correlated with its propensity to enter a foreign market and to prefer a sole or a joint venture mode. The reason behind the choice of joint venture mode may be for a large company to be less worried than a smaller firm with the potential possibility of exploitation by the partner of the host country.[25] The multinational experience is the other form of asset power. Obviously, the number of problems that a company without international experience will have to face will certainly be higher than those of a company with foreign market experience. This can lead companies without experience to renounce to enter the foreign market, because there is the tendency to overstate the potential risks. On the other hand, organizations with high multinational experience are expected to easily enter a new

[25] Agarwal, S. & Ramaswami, S.N., "Choice of Foreign Market Entry Mode: Impact of Ownership, Location and Internalization Factors", 1992

foreign market. However, a fairly common mistake is to use the same business strategy in different foreign markets.

When companies are able to develop differentiated products, there is the risk of loss of long-term revenues if they share their knowledge with host country companies. This could be the result if the host country firm, after having acquired such knowledge, decide to work as a separate entity. Thus, it is possible to say that when a company has these skills, higher control modes may be more efficient [Agarwal and Ramaswami, 1992].

1.6.2 Location Advantages

Firm interested in serving foreign markets are expected to prefer entry into more attractive markets. This is because in such markets the chances to obtain great returns are higher [Agarwal and Ramaswami, 1992]. Since 1979, China has made enormous progress in attracting foreign investors. During the last decades China's experience in working with foreign investors has continuously grown; so, the country learned how to create a stable investment environment for foreign investors. They introduced a lot of laws and regulations to encourage foreign investments in China and they increased the level of confidence of foreign companies in investing in the country.

In addition, as China's experience in attracting foreign investment grew, the inflow of foreign capital has had a positive effect on the growth of the Chinese economy. Between 1979 and 1992, the gross national product (GNP) of China quadrupled. Such growth led to an increase of the purchasing power of Chinese people, transforming the country into a quite large consumer market. The stable investment environment and the positive effect on the growth of Chinese economy allowed China to accumulate experience on foreign companies' choice of entry mode.

The attractiveness of a market refers to the market potential and the investment risk.

Market potential, i.e. size, growth potential, host government's attitude, is considered to be an important determinant of overseas investment. In high market potential countries, generally, a firm that choose an investment mode is expected to enjoy a greater long-term profitability and the opportunity to establish a long-term market presence. This is the result of the achievement of the economies of scale and of the consequent lower marginal cost of production.

Investment risk means the risk that the host country government will interfere with the repatriation of earnings and the control of foreign assets. The economic and political conditions and the government policies, which are critical to the survival and profitability of the companies' operations in a foreign country, also affect the degree of the investment risk. The restrictive policies of a host country's government can have a negative effect on inward foreign investment.[26] Therefore, in countries characterized by high investment risk, a company should prefer an exporting strategy rather than a wholly foreign-owned enterprise.

1.6.3 Internalization Advantages

The internalization advantage refers to the relative costs and risks of sharing assets and skills with a host country company rather than integrating them within the firm. Low control modes are considered superior for many transactions since they allow a firm to benefit from the scale economies of the marketplace, while not encountering the bureaucratic disadvantages that accompany integration [Agarwal and Ramaswami, 1992]. But, if managers are not able to predict future contingencies (for example external uncertainty) low control modes implies higher costs than integrating the assets and skills within the company. In a high uncertainty context, the writing and the enforcement of contracts may become very expensive. In other words, under these conditions sole venture and exporting

[26] Agarwal, S. & Ramaswami, S.N., "Choice of Foreign Market Entry Mode: Impact of Ownership, Location and Internalization Factors", 1992

strategies provide better control. This is due to the fact that assets and skills are kept within the company.

The diagram below summarizes the concepts expressed above.

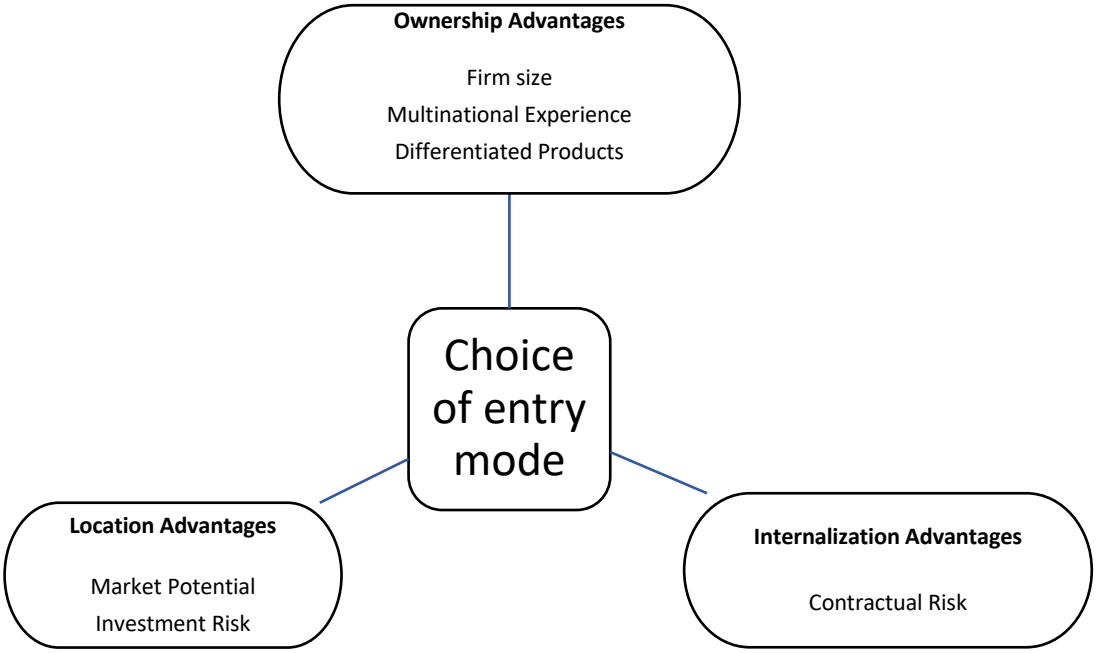

Source: Agarwal, S. & Ramaswami, S.N., "Choice of Foreign Market Entry Mode: Impact of Ownership, Location and Internalization Factors", 1992

Several studies have tried to explain the differences between the various entry strategies focusing on these three factors (ownership advantages, location advantages and internalization advantages); however, examining how the inter-relationships among the factors influence companies' entry choices is an issue of crucial importance. A particular entry decision cannot be viewed in isolation; thus, understanding the effects of the inter-relationships can explain companies' behaviors that cannot be captured by the independent effects of the factors.[27] For example, companies that have lower levels of ownership advantages are expected to either not enter foreign countries or use a low-risk entry mode such as exporting. However, many such companies have been observed to enter foreign markets,

[27] Hill C.W.L., Hwang P., Kim W.C., "An Eclectic Theory of the Choice of International Entry Mode", 1990

particularly those that have high market potential, using joint ventures or licensing agreements. This is a clear example of the types of behaviors that can be better understood if the joint effect of location advantages and ownership advantages is examined.

The next section will focus on the effects of interrelationship among determinant factors.

1.6.4 Effects of interrelationship among determinant factors

Multinational Experience/Size and Market Potential

As has been said above, investment modes would be preferred by large companies with multinational experience and would be undertaken in high market potential countries. According to these considerations, we can expect that when both factors are high, investment modes gain a positive result; while when the factors are low the combined impact results in a preference for no engagement. However, companies should dwell on this issue and look at the more hidden aspects; because this expectation does not consider any new information about companies' behavior. But, how larger and more multinational companies respond in countries that have lower market potential? And vice versa? An interesting review shows that investment modes may be chosen by larger multinational companies even in low market potential countries, and by smaller and less multinational firms in high market potential countries. Naturally, the likelihood of attracting foreign organizations of countries with lower market potential is lower. However, such markets often attract large companies with multinational experience; this is due to the fact that these companies may achieve their growth and profit objectives. Moreover, in some cases these markets give companies the opportunity for higher returns due to the presence of greater market imperfection. Only large companies possess the required amount of resources to bear the risk associated with entering low potential markets. The sole venture mode is the one preferred by companies

that decide to enter such markets. The reason is the need to coordinate operations on a global basis. In addition, these companies prefer full control of their overseas operations because overall profit maximization requires that their foreign ventures be tightly subordinated to the parents. If on one side exporting and joint venture strategies can reduce risks, on the other they do not allow the necessary strategic control and flexibility to stay competitive in a global environment. In particular, the joint venture mode can lead to a lack of coordination between the parties. Smaller and less multinational companies do not have sufficient resources and skills to enter a large number of foreign markets, so they concentrate their efforts in high market potential countries. The limited amount of resources pushes these companies to prefer joint venture strategies. Through this entry mode such companies can share costs, risks, assets and skills with the host country partner [Agarwal and Ramaswami, 1992].

Ownership Advantages and Investment Risk

In a context with high investment risk, companies are not expected to enter; and in case they decide to enter, exporting mode would be considered better rather than investing. However, depending on their ownership advantages, companies vary in their capacity in dealing with investment risk. Specifically, firms with valuable assets and skills (that are needed in these markets) may be able to bargain with host governments for concessions that provide them immunity against investment risk [Agarwal & Ramaswami, 1992]. Moreover, if the company possesses a proprietary product or technology, there are more chances that the company will be able to gain its bargaining power over host government. However, we need to specify that bargaining advantage is not necessarily provided to large companies with multinational experience. This means, for example, that valuable technology can imply a really good bargaining position also in countries with high investment risk. This happens because while the host government can be able to find alternative sources of capital, it may not find alternative sources of technology.

Additionally, companies with proprietary products or technology can be pushed by risk-reducing considerations to use higher control modes. The reason behind this choice is that this control allows companies to operate in a fairly safe way, because without their control they may face the omnipresent threat that host government will change policies in favor of local firms. Therefore, in markets with high investment risk, companies with higher ability to develop differentiated products are more likely to utilize a sole venture mode; while large firms with multinational experience may not choose a sole venture strategy in such countries.[28]

Market Potential and Investment Risk

The effect of high market potential implies a choice of investment modes; while the effect of low market potential indicates a choice of no entry. On the other side, the effect of high investment risk implies a choice of no entry; while the effect of low investment risk indicates a choice of investment modes. Thus, the joint effect of market potential and investment risk should be: (a) for investment mode a high/low combination, and (b) for no entry a low/high combination. Moreover, the need to establish market presence in high potential countries may be traded against the need to minimize investment risks. Thus, some companies decide to use strategies that isolate them from investment risks but at the same time provide them the market access. Such strategies include exporting and joint venture. On one hand the exporting mode provides companies immunity from investment risks in the host country; on the other hand, the joint venture strategy allows companies to shift a part of the risk to the host country partner. The latter can also help companies to negotiate with the host government, and this, obviously, reduces the investment risk of the firm.

[28] Agarwal, S. & Ramaswami, S.N., "Choice of Foreign Market Entry Mode: Impact of Ownership, Location and Internalization Factors", 1992

In conclusion, we can say that in countries with high market potential and high investment risk, companies tend to prefer exporting and joint venture strategies [Agarwal & Ramaswami, 1992].

Ownership Advantages and Contractual Risk

If risk of dissipation of knowledge, costs of writing and enforcing contracts, and risk of deterioration of quality of services are perceived high by a company, that company could refrain from entering a foreign country. This is even more probable if the company has specialized knowledge.[29] However, this type of companies is also interested in maximizing the economic rents on its knowledge. A lack of protection can expose specialized knowledge at risk; particularly because it would limit the flexibility a company has in adapting to future contingencies. A company characterized by specialized knowledge is expected to opt for an internal organization, since a flexible arrangement is difficult to achieve in a contractual setting. While, when contractual risks are low, a company may be more willing to share its specialized knowledge. This is due to the fact that as the risk of dissipation decrease, there are more possibilities for mutually beneficial contractual arrangements. And such possibilities are even higher in countries where the cost of writing and enforcing contracts is low.[30]

The contractual risks also do not pose a threat to firms that have ownership advantages arising from size and multinational experience as much as they do to ownership advantages arising from its knowledge base.

Lastly, we can say that firms with higher ability to develop differentiated products are likely to choose a sole venture mode in countries characterized by high contractual risks; while firms that do not have such ability may use a contractual mode even when risks are high [Agarwal & Ramaswami, 1992].

---

[29] Hill C.W.L., Hwang P., Kim W.C., "An Eclectic Theory of the Choice of International Entry Mode", 1990

[30] Agarwal, S. & Ramaswami, S.N., "Choice of Foreign Market Entry Mode: Impact of Ownership, Location and Internalization Factors", 1992

This first chapter provided a description of the different entry strategies available to companies that want to enter the Chinese market and analyzed the elements that foreign investors take into account in the decision process. As the entry mode is not only a strategic choice without consequences, the second chapter will study how such strategic decision affects the financial performance of a company.

CHAPTER 2: HOW A STRATEGIC DECISION AFFECTS A COMPANY'S FINANCIAL PERFORMANCE

The choice to enter the Chinese market is a typical strategic decision. However, this strategic choice has also implications on the financial management of the company, and different entry modes correspond to different risk profiles. For this reason, it is important to focus on the concept of risk.

Risk is a fundamental component of business activity. It is a consequence of the variability of the factors of the environment in which the company operates and it is at the basis of the uncertainty that characterizes the achievable economic performance.

As we all know, Italy and China have two different currencies; therefore, one of the most important risks that Italian companies have to manage is certainly the foreign exchange risk.

2.1 The Foreign Exchange Risk

The foreign exchange risk (also known as currency risk) is a financial risk that exists when a financial transaction is denominated in a currency other than that of the base currency of the company.

Doing business in China means that Italian companies have to deal with the Renminbi (Ab. RMB; simplified Chinese: 人民币), the official currency of the People's Republic of China. The yuan (simplified Chinese: 元) is the basic unit of the renminbi, but is also used to refer to the Chinese currency generally, particularly in international contexts where 'Chinese yuan' is widely used to refer to the renminbi.

First of all, dealing with business management requires to separate the concept of risk from risk exposure.

The risk refers to the volatility of a reference variable, in this case to the variability of the price of a currency in terms of another currency. The greater such variability

is, the greater the possibility that the exchange rate may experience significant changes over time.

On the other hand, the risk exposure refers to the impact that the change in the exchange rate produces on the performance of the company. It is therefore a matter of two different concepts: the risk is related to something that changes over time in an unpredictable way, while the risk exposure is related to what a company cannot change over time. Three types of risk exposure are included in the traditional classification:

- Translation exposure
- Transaction exposure
- Economic exposure

Translation Exposure

The translation exposure, also known as accounting exposure, is the risk that a company's equities, assets, liabilities or income will change in value as a result of exchange rate changes. This type of exposure is typical of multinational enterprises due to their investments abroad. The income statement of a company must be written in a single currency, thus the company has to translate all the voices denominated in foreign currencies; and during this translation process there is the possibility to suffer losses. There are two different usable conversion modes: the current method and the temporal method. With the first method items are translated at the current exchange rate, while with the second, also known as historical method, items are converted at the exchange rate in force at the time of their formation. The current method is generally used when the subsidiary is not well integrated with the parent company, while the temporal method is used when there is a significant operational link with the parent company. This is the case, for example, of a foreign unit that carries out only part of the whole production cycle. It is important to specify that whichever method is chosen, the conversion of items

denominated in foreign currency into domestic currency results in purely accounting gains or losses, which do not correspond to actual cash flows.

Transaction Exposure

The transaction exposure is the risk of loss from a change in exchange rates during the course of a business transaction. This exposure is derived from changes in foreign exchange rates between the dates when a transaction is booked and when it is settled. In other words, transaction exposure can be described as the impact of the fluctuation of the currency on the cash inflows and outflows of companies. Thus, the basic rule for an exporting company is: if the home currency weakens, the firm experiences a gain; while if the home currency strengthens, it suffers a loss. Thus, for example, let us assume the case of an Italian exporter who sells and invoices a Chinese customer for the supply of products for the equivalent of 100.000 yuan (元) on 1 April, payment at sixty days from the invoice date. We can say that, from 1 April to 31 May, the exporter is exposed to the exchange rate risk for 100.000 元. If the exporter had opted for an immediate payment, on the invoice date, he would had 100.000 元 and could have changed them into euros at the spot exchange rate of that moment. So, if the exchange rate was €/元= 1/7,000, the Italian exporter would have obtained 14.285,71€. Since the exporter can only have the money two months later, the amount of money that the company will actually cash will depend on the exchange rate of the payment date. If on payment date the exchange rate rises to 1/8,000, the exporter cashes 12.500€. This means that the exporting company receives a smaller amount of money than the previously expected. The difference between the two amounts is 1.785,71€; and this difference can lead to a reduction in the value of the company.

How to manage this risk exposure? The key to deal with this problem is to understand the moment in which the company begins to be exposed.

Naturally, not all companies want to be exposed to foreign exchange risk. When a firm does not want to run the risk of incurring a loss related to transaction exposure, it can adopt a hedging strategy.

Economic Exposure

The economic exposure, also known as operating exposure, is a type of foreign exchange exposure caused by the effect of unexpected currency fluctuations on a company's future cash flows, foreign investments and earnings. Therefore, this type of exposure can have a strong impact on a company's market value. Economic exposure, cannot be measured accurately; this is due to the fact that is difficult to quantify the involved variables. For example, assume that an Italian company that gets about 50% of its revenues from overseas markets has forecast a gradual decline of euro against major global currencies. If euro appreciates instead of declining gradually in the year ahead, this would represent economic exposure for the company. The euro's strength means that 50% of revenues and cash flows the company receives will be lower, producing a negative effect on its valuation and profitability. Even companies that operate exclusively in their domestic markets suffer the effect of this risk. For example, an Italian company that only sell in its domestic market would be affected by a stronger euro, because it would make imports from other countries cheaper, and this would lead to an increase of competition in the Italian market.

The degree of economic exposure is directly proportional to currency volatility. As foreign exchange volatility rises, economic exposure increases; while as foreign exchange volatility falls, economic exposure decreases.

How to mitigate economic exposure? Companies can use operational strategies (such as diversification of production facilities, financing sources, etc.) or currency risk mitigation strategies (such as matching currency flows, risk-sharing agreements and currency swaps).

The Limits of the Traditional Classification

Although this traditional classification of risk exposure can be very useful in order to describe and understand this matter, it is in fact a simplification of reality. Thus, cannot be used by companies as a starting point for risk management choices. The different types of risk exposure are nothing but different aspects of a sole risk. A single operation can have an impact on all three types of exposure; and trying to reduce a type of exposure can increase one of the other types. Thus, it is possible to state that there are strong interrelationships among the three types of risk exposure.

Moreover, this traditional classification tends to separate different risk concepts and consequently to manage each risk profile in a separate way with the finance department managing the transaction exposure, the strategic board managing the economic exposure and the accounting department managing the translation exposure. Such a similar management approach is dangerous, since it is destined to be suboptimal both for the duplication of coverage and for the risk transfer that it may produce, and for the result conflicts which may exist due to objectives that do not always coincide.

Therefore, an approach that integrates the three types of risk exposure identified by the traditional approach would be much more useful. This is the case of the 'managerial approach' that seeks to find a common goal able of acting as a unifying base and to guide a clear division of tasks among all the subjects involved. Only in this way, it is possible to have clear and coherent objectives at every operative and decisional level.

A company is the result of strategic choices on which the risk profile of the company obviously depends. At company level, the risk as extraordinary event able to compromise the company's performances can transform itself into an instrument that the company can use to produce wealth. Business activity is by definition a risky activity; but, the company should aim at keeping within it only those risks that is able to manage and those that cannot be eliminated.

According to the managerial approach, the foreign exchange risk must be carefully considered from the moment of determining the basic strategic choices, i.e. from the design phase of the organizational structure. The establishment of the business strategy and the development of the plan within which it takes form require credible projections on the future exchange rate dynamics. The expectations related to the future dynamics influence the cost structure, and hence the level of the minimum price compatible with the hypothesis of non-destruction of wealth. This way, the company exposure to the foreign exchange risk refers to the part not incorporated in the company's forecasts.

In conclusion we can say that from a managerial point of view, the exposure to foreign exchange risk arises with the drafting of the company strategic plan; extends over a time horizon equal to that covered by the plan and concerns the impact that exchange rate fluctuations other than those expected may produce on plan's result.

The financial performance of a company that works in a foreign market depends not only on the foreign exchange risk, but also on the tax system of the country in which it operates. The following section will analyze the Chinese tax system and the consequences for companies that have established themselves on that territory.

2.2 Chinese Tax System

Tax regulation is a complex topic at the domestic level; and it is obviously a much more complex topic at the international level. The international tax environment is a function of the tax jurisdictions established by the individual countries in which the company does business. Thus, in our specific case, companies that have decided to do business in China have to deal with the tax system of that country. There are two types of tax jurisdiction: the worldwide and the territorial. Unless some mechanism were established to prevent it, double taxation would result if all nations were to follow both methods simultaneously.

The worldwide method of declaring a national tax jurisdiction is tax national residents of the country on their worldwide income no matter in which country is earned. So, a company that operates also in foreign markets would be taxed in its home country on its income earned at home and abroad. Naturally, if the host countries also tax the income earned within their territorial borders, there is the possibility of double taxation, unless a mechanism is established to prevent it.

The territorial method of declaring a tax jurisdiction is to tax all income earned within the country by any taxpayer, domestic or foreign. Thus, regardless the nationality of the taxpayer, if the income is earned within the territorial boundary of a country, it is taxed by that country. Naturally, if the parent country also imposes a tax on worldwide income, the possibility of double taxation exists, unless a mechanism is established to prevent it. Therefore, the question arises: how to avoid double taxation? To answer this question a brief description of the Chinese tax system is necessary.

Chinese tax system is relatively new. During the 1980s, China has reformed its tax system, in order to regulate not only domestic enterprises but also foreign enterprises. There is no a single tax law or code governing the taxation of enterprises in China: there is a basic law giving the broad principles of each task and the details are provided by implementing regulations and specific rules in the form of circulars issued by the State Administration of Taxation[31] (SAT, *guojia shuiwu zongju* 国家税务总局) or the Ministry of Finance[32] (MOF, *caizhengbu* 财政部).

There are twenty-four taxes in China, but those concerning foreign companies are listed below.

[31] The State Administration of Taxation is the highest tax authority in China. It is responsible for the drafting of tax laws, the consultation with the State Council on fiscal policies, the formulation of construction procedures and the supervision of local tax offices, established at both provincial and municipal levels.

[32] The Ministry of Finance deals with the formulation of legislative procedures and the control of the budget of the country.

First, on March 16 of 2007 at the fifth Session of the tenth National People's Congress of the People's Republic of China, China adopted the *Enterprise Income Tax Law* (EITL, *qiye suode shuifa* 企业所得税法) that came into effect at January 1 of 2008. This law unified the separate income tax laws for domestic and foreign enterprises. Before 2008, foreign companies benefited from a lower corporate tax rate than domestic companies and enjoyed generous tax incentives.

Indeed, since the 1980s various types of economic areas were established in China; in these areas international trade and foreign investments were facilitated. Such areas include: special economic zones (*jingji tequ*, 经济特区), open cities (*kaifang chengshi,*开放城市), economic and technological development zones (*jingji jishu kaifaqu*,经济技术开发区), duty-free districts (*baoshuiqu*,保税区), and export processing zone (*chukou jiagongqu*,出口加工区). Investing in these areas, in the past, offered greater benefits than in the rest of the country because the value of taxes was much lower and because there were allowed import-export activities, initially forbidden elsewhere. However, since the entry of People's Republic of China into the WTO in 2001, things changed considerably. This means that nowadays, although these areas still offer a higher level of infrastructure, technical and logistical conditions, they no longer enjoy the benefits they enjoyed in the past. The Enterprise Income Tax Law has unified the tax treatment of domestic and foreign firms by providing a single tax rate for both types of company. Under the EITL, the general enterprise income tax rate is 25%. Nevertheless, a lower tax rate is applicable under the following circumstances:

- The applicable tax rates for income derived from China and received by a non-resident enterprise[33] without an establishment in China or without de facto relation with an establishment (if it has one) is 10%.

[33] A non-resident enterprise is an enterprise that does not have an establishment in China but derives income from sources within China.

- Specified small scale taxpayers are entitled a lower tax rate of 20% under some specific conditions[34] depending on their activity sector (industrial or non-industrial).
- Enterprises designated as "high tech enterprises" are allowed to enjoy a reduced income tax rate of 15%. According to this legislation, enterprises that can be designated as "high tech enterprises" should be registered in China at least for one year and have their activity in specified sectors (such as high-tech industry, electronic information technology, aviation technology, etc.).

This landmark law can be considered as the end of preferential treatments that foreign investors enjoyed in the past and it brought more transparency and fairness to the tax system.

Second, non-resident enterprises without establishment in China are subjected to enterprise income tax on a withholding basis for the following income derived within China:

- Dividend income and profit distributions (income derived by an enterprise from its invested entities.)
- Royalty income (income from providing use right for patent, non-patent technology, copyright, trademark and other license rights.)
- Interest income (income derived by an enterprise from provisions of funds to other parties that does not constitute equity interest.)
- Rental income (income derived by an enterprise for providing use rights for fixed assets, packaging materials and other tangible assets.)
- Gain from transfer of assets (income derived by an enterprise from the transfer of fixed assets, biological assets, intangible assets, capital investments, etc.)
- Other income which may be deemed taxable income.

[34] To see more details, go to http://www.fdi.gov.cn/1800000121_39_3339_0_7.html

Foreign enterprises without establishment or places of business in China shall be subject to a unilateral rate of withholding tax at 10%. Nevertheless, dividends distributed by a foreign investment enterprise out of its pre-2008 profit are still exempted from withholding tax.

For the prevention of double taxation with respect to taxes on income or capital, China has concluded a bilateral tax treaty with Italy. Double taxation agreement between Italy and China has been signed on 31 October 1986 and is effective since 1 January 1990. The main provisions of this agreement are simplified as follow:

- Tax on dividends: 10%
- Tax on interest: 10% (with exemptions for certain limited situation)
- Tax on royalties: 7% for royalties paid for the use or the right to use industrial, commercial or scientific equipment; 10% for other cases.

Last, in China the value-added tax (VAT) system is equally applied to both domestic and foreign companies working in the territory. VAT is applied on the sale of goods, repair and/or replacement of services, and on the import of items into China mainland. According to the VAT reform of 2016, VAT is levied also on taxable services (sale of transportation services, postal and telecommunication services, construction services, financial services, modern services and lifestyle services); sale of intangible assets and sale of real estate.

On 28 March 2018 the State Council announced the new adjustments applied to the VAT rates; these adjustments came into effect on 1 May 2018 and are described in the table[35] below:

[35] "*China Tax Alert*" URL: https://assets.kpmg.com/content/dam/kpmg/cn/pdf/en/2018/03/china-tax-alert-09.pdf

Applies to:	Old tax rate	New tax rate
Sales of goods, importation of goods, leasing of tangible movable property; Repair and processing services	17%	16%
Transportation services, sales and leases of immovable property, basic telecommunications services, construction services, postal services, agricultural products and water and gas supplies	11%	10%

The 6% VAT rate of financial services and insurance, telephony and internet data, technology and consulting sectors has not been modified.

After having analyzed the types of taxation to which foreign companies are subjected in China, we can finally provide an answer to the question how to avoid the problem of double taxation. The typical approach to avoid double taxation is for a nation not to tax foreign-source income of its national residents. An alternative approach is to use foreign tax credits. The general rule for tax credit is that an enterprise which derives income from outside China and which has paid foreign tax on this income, can deduct from the tax amount payable in China the amount of foreign tax already paid. The foreign tax eligible for tax credit is the amount of income tax paid outside China on income derived from China. However, companies should pay attention, because this system has a limit: the amount allowed for a tax credit is limited. It should notably not exceed the amount of China income tax. The limit of foreign tax credit is calculated according to the following formula[36]:

$$\text{Foreign tax credit limit} = A \times B / C$$

[36] "*Chinese Tax System-Overview*" URL: http://www.greatwaylimited.com/admin/upload/China'%20s%20tax%20system%20Overview.pdf

A= Total Chinese income tax payable on China-sourced and foreign-sourced income

B= Amount of foreign-sourced taxable income

C= Total amount of China-sourced and foreign-sourced taxable income.

As is said in the first chapter of this study, foreign companies can also use Hong Kong to enter mainland China. The following section of this chapter analyzes the financial advantages of using this strategy.

2.3 The Hong Kong Tax System

There are several reason why foreign investors choose Hong Kong as their preferred jurisdiction for establishing and expanding their business operation in China. The most interesting reason related to this case study is its high attractive tax regime.

Taxes in Hong Kong are levied on the "territorial principle"; thus, taxes are only levied on income derived from or arising in Hong Kong and not on income sourced outside Hong Kong. In other words, this means that a company that carries on a business in Hong Kong but derives profits from another place is not required to pay tax in Hong Kong on those profits. No tax is levied on profits arising abroad, even if they are remitted to Hong Kong. Hong Kong follows a single-tier tax system, because the company's profits are only taxed once. Hong Kong has an attractive corporate tax regime highlighted by low tax rates. The corporate tax rate is a flat 16,5% on assessable profits. There are 8.5 percentage points between the tax rates of China and Hong Kong. This notable difference is really attractive for foreign investors; however, investing companies should take into account that the costs of Hong Kong are higher than those of China. In simple terms, higher costs of Hong Kong may not justify the lower corporate income tax rates.

As regards the withholding tax, only specific types of payments are subject to withholding tax in Hong Kong such as royalties. There are no withholding taxes levied on dividends and interest. The withholding tax rates for royalty payments

vary depending upon whether the non-resident company is an associate of the Hong Kong company. The withholding tax rate for royalty payments due to a non-resident company that is an associate of the Hong Kong entity is 16.5%; while the withholding tax rate for royalty payments due to non-resident companies that are not associates of the Hong Kong company is 4.95%. The following companies are regarded as 'associates' of the Hong Kong entity:

- A corporation over which the Hong Kong entity has control;
- A corporation that has control over the Hong Kong entity:
- A corporation under the same control as the Hong Kong entity.

Lastly, unlike China, there is no value-added tax (VAT) or sales tax imposed in Hong Kong.

It is therefore evident that the Hong Kong tax system is simpler and more attractive than the Chinese one; and in order to further highlight the differences between the two countries, the following table will be useful:

	China	**Hong Kong**
Corporate Income Tax	25%	16.5%
Withholding Tax	On Dividend: 10% On Interest: 10% On Royalties: 7%/10%	On Dividend: X On Interest: X On Royalties: 16.5%/4.95%
Value-Added Tax	16% / 10% / 6%	X

The chapter called "Special Tax Adjustments" of the Enterprise Income Tax Law includes the principles of another significant aspect for companies settled in China: the transfer pricing issue, which will be discussed in the next section of this chapter.

2.4 Transfer Pricing

Intercompany transactions generally offer the opportunity to shift income from one jurisdiction to the other, which may be a valuable instrument for multinational enterprises to overall tax burden. At the same time, profit shifting imposes risk to governments as it may reduce tax revenues. Thus, in order to avoid profit shifting through intercompany transactions, governments have introduced and extended transfer pricing regulations.

Given the increasing importance of foreign direct investments in its national economy, China in the last decades, has developed rapidly its transfer pricing practice. China's transfer pricing policies are generally based on the Organization for Economic Co-operation and Development (OECD) Transfer Pricing Guidelines for Multinational Enterprise and Tax Administrations. In some areas transfer pricing rules lack specific implementation guidance; thus, in case of particular transfer pricing case, is the local tax authority that has the power to decide. On 17 March 2017, The State Administration of Taxation issued the "Announcement of the State Administration of Taxation on Promulgation of the Administrative Measures on Special Tax Investigation, Adjustment and Mutual Agreement Procedure" (SAT Bulletin No 6 of 2017[37]), which took effect on 1 May 2017. Bulletin 6 renews and replaces part of the transfer pricing rules issued in 2009 by the "Implementing Measures for Special Tax Adjustments". Since 2009, there have been many developments in transfer pricing; and since China played a significant role in the launch of the Action Plan on Base Erosion and Profit Shifting (BEPS Action Plan), the old rules had to be changed. Through the inclusion of the desktop review of transfer pricing filling documents and the monitoring of the profit level of the enterprise, tax authority has strengthened the transfer pricing administration.

[37] "Bilingual Version of Bulletin 6" URL: https://s3-eu-west-1.amazonaws.com/3eeb8fe9-6553-11e7-b33e-0287636382f5/ae03c317-ae6a-11e7-b33e-0287636382f5/upload/0sb9cpts69vwxk4go8dyx3jdlhxlibub/170509-bulletin-6-translation.pdf

One of the most significant changes concerns the approach applied to transfer pricing documentation. There are three types of documents within the regulatory framework:

- *Master file*: it provides an overview of the activities of the multinational company, describing the nature of its operations at a global level and the adopted transfer pricing policy. It is required for companies that support transnational transaction with related parties on an annual basis and for holding companies that perform consolidated financial statements. This type is also used for annual transactions with a value that exceeds one billion RMB.
- *Local file*: it contains detailed information on the transactions between related parties that occur between Chinese affiliated companies. It is applied to transactions where the value of the property of tangible assets exceed 200 million RMB; transactions where the value of intangible assets exceeds 100 million RMB; transactions of financial assets of more than 100 million RMB; and any other type of transaction of more than 40 million RMB with the related party.
- *Country-by-country report* (CBC): it provides an overview of the overall allocation of the company's profit, the paid taxes and the indications about the position of economic activities among the tax jurisdictions in which the multinational enterprise operates.

Moreover, a *special file* is required for service transactions, cost sharing and thin capitalization.

The companies that have signed an advance price agreement[38] (APA) are not obliged to prepare the local and special documents; and the amount indicated in the APA is not included in that of the transactions with the related party.

These new regulations are part of a series of initiatives for a more regulated Chinese market; and represent a stricter supervision of transactions between a

[38] An advance price agreement (APA) is an ahead-of-time agreement between a taxpayer and a tax authority on an appropriate transfer pricing methodology.

company and its related parties. In order to fight fraud, the Chinese government provided more comprehensive and systematic rules. On the other hand, these new and more detailed regulation have created new challenges and doubt for taxpayers, whose workload, due to the maintenance of tax compliance, has increased.

Very recent news has come from Hong Kong. Until a few months ago, the Hong Kong Inland Revenue Ordinance (IRO) did not contain any specific transfer pricing rules or legislation. On 4 July 2018, Hong Kong's Inland Revenue passed its final reading in Hong Kong's Legislative Council of (Amendment No.6) Bill 2017. The Amendment Bill became law of Hong Kong on 13 July 2018 and codifies certain transfer pricing principles, introduces mandatory transfer pricing documentation requirements into the IRO, and implements the minimum standards released in the Consultation Report on Measures to Counter Base Erosion and Profit Shifting. The Amendment Bill adopts the OECD's recommended three-tiered documentation structure, comprising master file, local file and country-by-country report.

This new legislation clearly represents a marked change in the transfer pricing environment in Hong Kong. It seems that the aim of the authorities is to align Hong Kong regulations with those adopted worldwide. Therefore, Hong Kong taxpayers should review their own affairs to determine how they may be affected by the new legislation.

This chapter provided a description of how what seems only a strategic choice in reality has implication on the financial management of the company.

CHAPTER 3: USEFUL DRIVERS TO CONSIDER

Before analyzing the main factors that companies exporting in China take into consideration, the first section of this chapter aims at exploring the Chinese context and its market development. It is necessary to bear in mind that the Chinese market is extremely complex and hard to understand; and, as far as its dimension, institutional assets, data availability, and development rate, China is a case by itself. Therefore, this exploration will be useful in order to better understand the relationship between such a difficult context and the driving factors that determine a company's performance in China.

3.1 Exploring the Context: China and its Market Development

With a GDP of 11,2 billion USD in 2016, China is the second largest global economy after the US (18,57 billion USD in 2016) (World Bank, 2018). The origins of the current economic scenario date back to 1978. Since 1978, the Chinese government aimed at freeing several industries in order to attract Foreign Direct Investments and issued some 'open market reforms'. Among the many reforms, the most important one is certainly the 'Open-Door Policy' initiated by Deng Xiaoping 邓小平 to open up China to foreign businesses that wanted to invest in the country. This policy set into motion the economic transformation of modern China. In 2001 China entered the WTO, taking an important step towards global trade. Since the country joined the WTO, exports and imports of goods have grown tremendously and exports took over imports. Nowadays, China's trade surplus narrowed sharply to USD 27,91 billion in August 2018 from USD 40,05 billion in the same month a year earlier (Trading Economics[39]).

When exploring the economic development of China, it is important not to forget the existence of economic disparities on the Chinese territory. After 1978, the

[39] See https://tradingeconomics.com/china/balance-of-trade

Chinese government has invested heavily on spatial development of coastal areas; and today the most developed regions of the country are the regions of Bohai Bay (*Bohai wan* 渤海湾) (that includes Beijing and Tianjin), Yangtze River Delta (*Changjiang sanjiaozhou* 长江三角洲) (that includes Shanghai, Suzhou, Hangzhou and Ningbo) and Pearl River Delta (*Zhujiang sanjiaozhou* 珠江三角洲) (that includes Macao and Hong Kong). Since these areas have experienced a significant economic boom, consequently, they are also the most densely populated regions of the country.

When a company decides to do business in China, it has to consider an integral part of the Chinese business and culture climate: the concept of *guanxi* 关系. The concept of *guanxi* is a core part of doing business in China and although the term is often translated as 'connections', or 'relationships', none of these definitions do justice to the fundamental and complex concept and its central role. We can define *guanxi* as the network of contacts an individual or a company can call upon when something needs to be done. The Chinese business model tends to be focused on this concept; and, this network can have a strong impact on conducting business in China, including market expansion and sales growth. Furthermore, setting up a business in China is time-consuming; thus, maintaining open bureaucratic *guanxi* can also help to set up with minimum delays.

Chinese culture is characterized by high power distance, high collectivism and low uncertainty avoidance; but, we all know that culture is not something static. Although the Chinese culture is also characterized by traditional norms and values, the business climate is continuously changing.

The attractiveness of the Chinese market plays a significant role in attracting foreign investors. Such investors are generally growth oriented, they continually look for growth opportunities to increase sales and profits.

This framework makes us understand that doing business in China is getting more and more complicated; the country is changing so fast that foreign investors that want to succeed need clear and strong plans and objectives.

The following part of this chapter will describe some factors that companies have to consider when they decide to enter the Chinese market. Such factors and their interrelationships affect the economic and financial performance of the company and its exposure to the risk.

3.2 Management Risk Attitudes and Company's Experience

The level to which the company will accept various international business risks depends on the context: the company's strategic options, its financial situation, the competitiveness of its competitive environment and its relevant experience. It Is important to bear in mind that the perception of risks associated with individual market entry modes or countries may influence companies' decisions considerably [Koch, 2001]. The less risk-averse the management, the more likely it is for the company to select countries that show greater long-term prospects and promise to enhance the firm's capabilities [Johansson, 1997, p. 124].

The success or the failure of a company in a foreign market depends also on the company's experience. Experience is a major factor shaping the strategic decisions, the corporate culture and the collective knowledge. Without sufficient, relevant experience and knowledge, there tends to be a stronger sense of risk and uncertainty involved in the global decisions, which in turn constrains at least the subjective, if not the objective, freedom of choice of market entry modes. The market entry selection process can obviously be influenced by some experiential factors, for example in what circumstances, how many times, how recently the company has used any particular market entry mode and their success rates. Generally, companies that have gathered a considerable knowledge of a region prefer to invest resources into business ventures in that region rather than seek contractual modes there. It has been suggested that managerial succession often explains the changes in the preferred market servicing modes. The market entry selection process is more likely to be subject to scrutiny and ongoing improvement, if the shared reflection-in-action becomes commonplace [Koch, 2001].

Understanding the characteristics of the country business environment is another crucial element when deciding to do business abroad. However, while the general characteristics of overseas country business environment are generally quite easy to obtain nowadays, industry and company-specific information is more difficult to acquire. On one hand the first type of information is not always free from bias, complete and up-to-date; on the other, the second type is considered to be more sensitive and may be quite costly to obtain (generally is not provided free of charge). Therefore, this could be a barrier for small companies or beginners. The potential entrants into the Chinese market have to consider a long list of information; such list includes for example: similarity and volatility of business regulation and practices, business infrastructure, customer sophistication, intensity of competition, etc.

Competition is one of the relevant factors that companies that want to enter the Chinese market have to take into account; thus, this aspect deserves particular attention.

3.3 Competition

The economic miracle may have slowed of late, but China remains a key market for international expansion. As we all know, Chinese market is a market of impressing dimensions; and since China has opened its doors to foreign investor, the level of competition has further increased. Thus, companies need to define a business strategy in order to obtain a competitive advantage. The need to arrange a strategic plan is linked to the growing competition and the constant evolution of the competitive environment, which without a proper strategic approach, would be unpredictable. In other words, the purpose of business strategy is to build a competitive business system that leads to economic value creation. The latter is

created when the revenues generated by the business are equal or larger than the total cost of doing business[40].

According to Porter Competitive Strategy's theory[41], there are three strategies for gaining competitive advantage:

- The Cost Leadership Strategy;
- The Differentiation Strategy; and
- The Focus Strategy.

First, the cost leadership strategy tries to increase profits by reducing the costs. Companies using this strategy are less focused on quality; they increase market share through charging lower prices, but they still make a reasonable profit on each sale because they have reduced costs.

It is important to stress that this type of strategy is about minimizing the cost to the organization of delivering products and services; and the cost or price paid by the final customers is a separate issue. The cost leadership strategy means being the leader in terms of cost in the company's industry or market. Simply being among the lowest-cost producers can be quite risky, as the company leaves itself exposed to attacks by other low-cost producers who may be able to obtain lower costs and therefore block the company's attempts to increase market share. The companies that are trying to achieve cost leadership have to ask themselves: do we have access to the capital needed to invest in technology that will bring costs down? Are our logistics efficient enough? Moreover, such companies need a low-cost base (labor, materials, facilities, etc.) and a strong confidence in believing that they can achieve the expected results. This is because pursuing this strategy can bring a relevant risk: the sources of cost reduction may not be unique to only one company; thus, competitors can copy the cost reduction strategies of other companies. Therefore, it is very important to continuously find ways of reducing every cost.

[40] P. Lasserre, Global Strategic Management, Third Edition, "Design a global strategy", Chapter 2, page 28.

[41] M. Porter, "Competitive advantage: creating and sustaining superior performance", 1985

Second, the differentiation strategy involves all strategic decisions that have the aim to distinguish the product or the service from competitors in order to strengthen the value and the income generated by it. In other words, differentiation means making the product or service more attractive than those of the competitors. The way to do this depends on the nature of the industry and on the products and services themselves; but, generally involves functionality, product features, durability and support. Companies pursuing this strategy need good research and innovation, the ability to deliver high-quality products and services, and effective sales. The differentiation strategy allows the company to fix higher prices, increase sales and therefore achieve the advantage of differentiation.

Last, companies that use focus strategy concentrate on niche markets and, by understanding the dynamics of that market, develop uniquely low-cost or well-specified products. This approach leads to the creation of a strong brand loyalty and this is due to the fact that companies using this strategy serve their customers in a unique mode. Consequently, this makes the market segment less attractive and competitors may be less interested in investing in such segment.

Companies that enter the Chinese market will face a great number of competitors, both Chinese and foreign. Since the production costs of China are much lower than the Italian ones, is difficult for such companies to be the leader in terms of costs reduction. In this case, differentiation strategy may be the best solution: provide a unique, rare, inimitable product is the key element to achieve success.

Knowledge, and its acquisition and exploitation, can be considered another key resource to create sustainable competitive advantages. In the era of global competition, it is asserted that firms succeed not only because they have superior control over scarce resources, but because they are able to learn and to use this learning more efficiently than others [Li, 2004]. Experiential foreign market knowledge involves two main aspects: foreign institutional knowledge and foreign business model. Foreign institutional knowledge refers to experiential knowledge of government, institutional framework, norms and values. This kind of knowledge is relevant because allows the company to understand technical and commercial

laws that can be applied in the foreign context. For example, for companies exporting goods to China is important to understand the export procedures so that the company is able to carry out shipment of goods, payments and related issues. The lack of this knowledge can reduce the competiveness of the company because it leads to delays. Thus, improved foreign knowledge reduces this risk.

On the other hand, foreign business knowledge refers to the experiential knowledge of clients, the market and competitors. The lack of experiential knowledge of a particular client's way of working and its particular needs can be problematic [Li, 2004].

3.4 Profit Margin

Profit and risks are in fact two complementary dimensions of a company's business. The goal of every business owner is to make profit and hopefully earn greater profits each year. The company's business plan describes the actions the company's management team intends to take to generate sales and to keep expenditures at reasonable levels, so that the net result is a profit. Thus, profit margin is normally the first factor that any company considers before investing in a new market. In practical terms, a company will invest in a foreign country only if it is worth the risk. Therefore, a forecasting process is what all companies need before investing. The financial forecast is the numerical expression of the strategies described in the business plan, showing the revenues the company expects to generate, minus the costs of generating the revenues and operating the business, to arrive at profits. Thus, the question arises: how does a company build a proper financial forecast? First of all, fixing a time horizon may be very useful. Then, generally, it is much easier to forecast expenses rather than revenues; so, the company should start estimating the common costs it will bear. In case of exporting strategy, the main costs will be those related to the production and shipment of goods and the bureaucratic costs. In case of licensing and franchising strategies, the company should also consider the fees it has to pay. The joint venture mode

will lead also to have substantial communication costs and contractual costs. Naturally, the entry strategy with highest costs to bear is the wholly foreign-owned enterprise. Setting up in a new country means facing a lot of costs: beside the cost of goods sold, there are plant purchase or rental costs, legal and insurance costs, salaries, utility bills, distribution costs, and others.

Forecasting revenues can be a very hard process. Before discussing this issue, we need to identify the two approaches between which a company can fluctuate: the conservative case and the aggressive case. The conservative case is the downside, or low case of a business's projection using the most conservative set of assumptions. The financial results for the conservative case should be worse than those for the aggressive case[42]. A conservative reality is not as risky as an aggressive dream state; but, investing in a new market means also that the company is willing to be exposed to the risk. Thinking big and creating a set of ambitious forecasts can lead to the generation of ideas that will grow the business of the company. Obviously, every company has to be aware of the risks it wants to run and has to establish its benchmarks.

The best way to reconcile revenue and expense projections is by a series of reality checks for key ratios. The first ratio is the gross margin. Gross margin is a company's total sales revenue minus its cost of goods sold (COGS), divided by total sales revenue, expressed as a percentage. The gross margin represents the percent of total sales revenue that the company retains after incurring the direct costs associated with producing the goods and services it sells.

$$\text{Gross Margin}\,(\%) = \frac{\text{Revenue} - \text{Cost of Goods Sold}}{\text{Revenue}}$$

Source: Investopedia.com

[42] Conservative Case Definition, Investor.com, URL: http://www.invstor.com/information/go-big-dictionary/conservative-case-definition

The gross margin number represents the portion of each euro of revenue that the company retains as gross profit. For example, if a company's gross margin is 20%, that means that it retains € 0.20 from each euro of revenue generated. As the COGS have already been taken into account, the remaining funds can be used to pay off debts, administrative expenses, interest expenses and distributions to shareholders. Gross margin is important for companies because they can measure how their production costs relate to their revenues. Thus, if the company's gross margin is falling, it may cut its cost or look for suppliers who offer lower costs on material; otherwise, it can decide to increase the prices. Investing companies should pay attention because this is one of the areas in which aggressive assumptions can become too unrealistic.

The second ratio is the operating profit margin. Operating profit margins is a profitability ratio used to calculate the percentage of profit a company produces from its operations, prior to subtracting taxes and interest charges. It is calculated by dividing the operating profit[43] by total revenue; and expressed as a percentage.

$$\text{Operating Profit Margin} = \frac{\text{Operating Profit}}{\text{Total Revenue}}$$

Source: corporatefinanceinstitute.com

The operating profit margin provides an insight into how well the company performs, how efficiently a company manages its expenses so as to maximize profitability. A company's operating margin is usually seen as a superior indicator of the strength of a company's management team, as compared to gross profit margin[44]. This is because it reveals the amount of revenue returned to a company once it has covered virtually all of its fixed and variable expenses (except for taxes

[43] Operating profit is calculated by subtracting all COGS, depreciation and amortization and all relevant operating expenses from total revenues.

[44] Corporate Finance Institute, "What is operating profit margin?", URL: https://corporatefinanceinstitute.com/resources/knowledge/finance/operating-profit-margin/

and interest). The higher the operating margin, the more profitable a company's core business is. The company should expect positive movement with this ratio. As revenues grow, overhead costs should represent a small proportion of total costs and the operating profit margin should improve. Sometimes entrepreneurs make a mistake: they forecast this break-even point too early and assume they will not need much financing to reach this point[45].

These two ratios represent the ability of the company to convert sales into profits. Naturally, accurately predicting profit margin is far from simple; and even with accurate calculations it is not possible to predict market trends and how this will affect, positively or negatively, the profits of the company. Moreover, building an accurate set of growth projections can be time consuming. However, the company has to be sure that its investment will bring it profits. Earning a healthy profit is essential to the healthy operations of any business. In conclusion, is possible to state that if the costs are reasonable and the profit is sufficient, then the company will be able to operate without incurring unstainable debt.

3.5 Sales Volume

According to the Cambridge dictionary, sales volume is "the quantity or number of products sold or services provided by a company in a particular period of time"[46]. Sales volume has very direct and significant effect on the company's profit-earning potential. Estimating sales volume is fundamental in the initial phase of process to decide whether or not to invest in a new market, during the design phase to define the right level of industrialization and price, and also during the sale phase in order to confront a target. Estimating sales volume is one of the most difficult and uncertain operations and can be used for three main reasons: estimate the return

[45] Enterpreneur, "How to Forecast Revenue and Growth", URL: https://www.entrepreneur.com/article/76418
[46] Cambridge Dictionary, URL: https://dictionary.cambridge.org

on investment of a product, decide the right level of price of the product, and define a sales target.

Obviously, the sales volume has a strong impact on entry mode selection process. For example, if the sales volume of the company is so high that the company can bear all the costs associated with having a plant in China, the company may opt for a wholly foreign-owned entry mode or a joint venture mode. Such strategies will allow the company to have better control on the sales operation and to deliver products or services with significantly shorter times than an exporting strategy. On the other hand, if the sales volume of a company is lower and the costs it has to bear are too high, an exporting entry strategy may be preferred.

Within a business, sales volume may be monitored at the level of the product, product line, customer, subsidiary, or sales region. Moreover, a company may also monitor its break-even sales volume, which is the number of units it must sell in order to earn a profit of zero. Knowing the company's break-even point is crucial, particularly when sales are contracting. This way managers can determine when the company should implement cost reduction, whether to launch a new product, when to drop one and the effect of the company' sales beyond break-even on its profits and taxes. This concept can be quite difficult to employ when there are many different products, and especially when each product has a different contribution margin.

However, it is important to stress that sales personnel often mistakenly believe that they can favorably impact company profitability by focusing solely on sales volume. Such an orientation overlooks the important impact of selling expenses and can easily result in an inadequate level of profit despite high sales volume [Dubinsky and Ingram, 1984]. According to Dubinsky and Ingram a useful starting point to adopt a profit orientation could be to ascertain the profitability of each customer. This task should be especially enlightening for the company because salespeople often are unaware of the rather wide profitability disparity among their customers. Therefore, a general conclusion is that typically a small percentage of

customers provides a large portion of company profits [Dubinsky and Ingram, 1984].

Profit margin and sales volume are two relevant drivers in deciding whether to invest or not and in selecting the most suitable market entry strategy. This begs the question: is it better to decrease prices and gain volume or raise prices and sell less volume?

Selling more for less or selling less for more?

This is a natural dilemma: to lower prices and thus gaining volume or to increase prices and sell less volume at a higher profit margin? There is not one right answer to this question. Both strategies have their upsides and downsides. The decision of which strategy to use actually rests on the deep understanding of each company's value proposition, and its customer base and expectations. Do their clients look for hotter deals on a product or do they expect high quality products that are durable and reliable (and for which they are willing to pay a little more)[47]? It can be easy to find the answer to this dilemma; the company should have clear in mind what is its value proposition and what do its customers expect. Sometimes the market does not even give the company the possibility to choose; because is the market place that will evaluate your company's product's performance and that of your competitors. Thus, the choice of which strategy to use depends on the market in which the company operates. Comparison and market research can be revealing instruments but obtaining information can be difficult and time-consuming.

[47] Forbes.com, "Selling More for Less or Selling Less for More", URL: https://www.forbes.com/sites/prospernow/2011/01/21/selling-more-for-less-or-selling-less-for-more/#bf87b754447b

3.6 After-Sales Service

Another factor that weighs on the choice of how to enter the Chinese market is the after-sales service. After-sales service refers to various processes which make sure customers are satisfied with the products and services of the firm. Chinese market is a huge market within which competition is very high; thus, companies operating in such market must try to do their best in satisfying customers so that they come back again. The role of after-sales service in customer satisfaction is important: the company should fulfill the needs and the demands of its customers and this can lead to a positive word of mouth effect. In the current scenario, positive worth of mouth plays a significant role in promoting the company's products and therefore acquiring new customers. Providing a good after sales service can generate loyal customers; and a happy and satisfied client can also bring more revenues to the company.

After-sales service refers for example to the necessary support to install, maintain or operate a particular product, the possibility to exchange damaged products, the on-site service, the willingness to accept the customer's complaints, etc.

Is therefore evident that, for Italian companies dealing with China may be quite difficult. As China is far from Italy, a joint venture strategy or sole venture strategy may facilitate the company in order to provide after-sales service and increase the level of satisfaction of its customers. Having a plant on the Chinese territory can certainly make the difference. The immediate availability to solve customers' problems improve the company's position and value. While using the exporting strategy to enter the Chinese market can have negative implications in terms of after-sales assistance. It is true that today we live in Internet era and that communicating has become increasingly easier (for example on Skype); but the exporting strategy requires a longer timing. Think for example at a simple communication by e-mail: China and Italy have two different time zones, thus a communication that could take only a few minutes, instead takes many hours. The problem becomes even bigger when the company has to provide on-site service.

The presence on the local territory allows the company to provide this type of service in a short period of time; while the non-local presence means spending a lot of hours on a plane and wasting time, which in turn may mean losing the customer. Naturally, the company has to understand if it has convenience, in terms of costs, to be present on the Chinese territory. This decision can also be linked to the frequency with which the company exports and to its sales volume. It is clear that if the company exports only small quantities of goods, it makes no sense to bear all the costs associated with a wholly owned subsidiary.

3.7 Company Size

A consideration on the size of the company and its investment capital seems to be fundamental in considering the factors that influence the selection process of the entry mode in a new market. We can say that company size (in terms of capital) is the common denominator of all factors mentioned above.

"*A budget is defined as the formal expression of plans, goals, and objectives of a management that covers all aspects of operations for a designated time period. The budget is a tool providing targets and directions*."[48]

The budget can be considered as one of the main tools used by management control to assess the company's performance; and the budget orientation should be towards maximizing economic and financial performance. Thus, one of the most important objectives of the budget is to evaluate if sufficient resources are available to implement the desired strategy. It is therefore easy to think that great differences exist between large corporations and small and medium-sized enterprises (SMEs); and that large companies may be facilitated. Indeed, literature tends to show that larger companies have sized-related advantages that enable them to more effectively engage in international operations [Ruzzier and Konecknik Ruzzier, 2012]. Firm size might allow an organization access to

[48] Jae K. Shim, Joel G. Siegel, Allison I. Shim, "Budgeting basics and Beyond", Fourth Edition, John Wiley & Sons. Inc., 2011, p. 1

resources denied to smaller firms and thereby help organizations taking risks, withstanding setbacks and initiating changes. Increased size provides more market power to an organization to deal with its stakeholders in technical as well as institutional environment.[49] The traditional international business and the international marketing literature equate larger size with greater resources, market power, and monopolistic advantage, which allow firms to overcome the sunk costs of internationalization [Caves, 1999]. The resource scarcity (especially capital resource scarcity) can have a strong impact on the ability of the small and medium-sized firms to enter foreign markets and can also limit their ability to reach more advanced stages of internationalization. However, more resources do not always mean better resources and better performance. Small and medium-sized enterprises seem to have to overcome greater obstacles; but by utilizing their specific advantages and discovering niche markets, they may compensate for their disadvantages [Buckley, 1993]. The strengths of SMEs can be for example high quality standards, individualized products or services, a flexible cost structure, etc. Naturally, companies possessing more financial resources are able to pursue a boarder range of activities as well as more ambitious projects [Cooper, 1994].

The financial and economic budget is therefore the instrument that summarizes the choices of the company towards the creation of value. Obviously, the objectives, in order to be achievable, must be consistent with the internal and external environment. Every predetermined objective must be sustainable for the company, and in this sense the budget plays a significant role. This is because the priorities of implementation are established with it and it also allows the progress of the projects. This makes us understand that since a company's activities must be financially sustainable, operating with benchmarks is crucial; particularly for small and medium-sized firms. It is likely that the larger a company is, the more substantial the capital is. In this sense a large company has more chances to make mistakes than SMEs.

[49] P. Dass, "Relationship of Firm Size, Initial Diversification, and Internationalization with Strategic Change", 2000

The planning of the objectives to achieve must take into account the degree of related risk which occurs in every company. It is therefore appropriate to mention the so-called 'risk management' that can be defined as the process of identification, analysis and acceptance or mitigation of uncertainty in investment decisions.[50]

3.8 Corporate Risk Tolerance

Enterprise risk management (ERM) has become a critical practice in organizations that want to manage uncertainty and its effect on achieving organizational objectives.[51]

Risk tolerance is an important component in investing, but before discussing this issue a distinction between risk tolerance and risk capacity is needed. Risk tolerance can be defined as the amount of uncertainty an organization is willing to accept within a particular risk category or for a specific project. It is often communicated in terms of acceptable or unacceptable outcomes. Risk tolerance statements identify the specific minimum and maximum levels beyond which the organization is willing to lose; and the range of deviation within the expressed boundaries would be bearable. Exceeding the company's established risk tolerance may threaten its survival due to the consequences in terms of cost.

Risk capacity is the amount of risk an organization can actually bear. On one side the company may have a high-risk appetite but not have enough capacity to handle the risk's potential impact; on the other, the risk capacity may be high, but the company may decide to adopt a lower risk appetite.

Risk appetite and tolerance are influenced by the nature of the firm and by the industry that the company operates in. Companies with higher risk appetite generally are more focused on the potential for a significant increase in value and earnings. Conversely, companies with lower risk appetite generally are more risk averse as they focus on stable growth and earnings. Moreover, in order to stay in

[50] Investopedia, "Risk Management", URL: https://www.investopedia.com/terms/r/riskmanagement.asp
[51] RIMS Executive Report, "Exploring Risk Appetite and Risk Tolerance", 2012.

synchronization with its evolution, a company should also continue to refine tolerance statements over time.[52]

However, it is important to stress that risk can lead to both positive and negative results. Thus, risk cannot be seen only in bad light.

A suitable investment project for all investing companies does not exist; because a single investment project cannot represent different financial situations. Dealing with excessively high risks can lead to negative result; and different types of investments are subject to different levels of risks. Thus, an appropriate assessment of the company risk tolerance is necessary to prevent any loss. The question arises: how to measure the company's tolerance for financial risk? The best approach is probably to examine different scenarios, in particular the worst potential scenario, and wonder if the investment project can be carried out despite the loss.

The size of the company certainly affects the degree of risk tolerance. Economists have generally assumed that the degree of risk aversion of the investor decreases as wealth increases. As the firm grows and accumulates additional wealth, its ability to undertake larger, more risky projects also grows. Therefore, we would expect larger firms to be relatively less risk averse when evaluating risky exploration projects. [Walls and Dyer, 1996].

Howard (1988) noted that corporate risk tolerance appears to grow roughly proportional to financial measures associated with the companies, such as sales, net income and owner's equity.

The company's experience can be identified as another element that affects the degree of risk tolerance of a firm. The previous experiences of a company can have both a positive or negative effect on how it behaves in the face of risk. A company with years of experience may have learned a lot from the past and may feel more confident in dealing with risk; on the contrary, a novice company that does not have many years of experience (in terms of internationalization) may feel more exposed to the risk. The in-depth knowledge of the market, of dynamics that

[52] RIMS Executive Report, "Exploring Risk Appetite and Risk Tolerance", 2012.

characterize it, of the customers who are part of it, of the competitors who operate in it, is one of the most precious resources that a company can possess to build a solid basis for its competitive advantages.

Additionally, also the quality of the product or service that the company sells and its perception in the market can give the company greater security when operating in a new market. Attacking the foreign market with a desired high-quality product or service means having the possibility to get rid of competitors (both local and foreign) and the possibility to obtain new customers and increase sales volume. The latter leads the company to strongly strive for the entry in a new market and to be less risk averse.

3.9 The Company's Risk Formula

All the drivers mentioned in this chapter can be grouped in three main areas:

- the company's capital availability for the specific Chinese project (in relation to its capital endowment) (including: sales volume, company size, and corporate risk tolerance);
- The perception of the quality of the product in the market (including: competition, profit margin, and after-sale service); and
- The knowledge and experience of the company in foreign markets (including: management risk attitudes).

In the light of what has been said above, it is possible to state that the available investment capital of the company, its previous experiences and the market knowledge, and the quality of its product or service are inversely proportional to the risk. Thus, if the capital of the firm, its experience in foreign markets, and its product's quality increase, the degree of risk reduces (and vice versa).

Starting from this concept, it is possible to consider these three macro areas as parameters to construct the following analytic formula:

$$Rtot = C \times R1 + Q \times R2 + E \times R3$$

- Rtot: total risk of the company
- C x R1: refers to the share of risk related to the invested capital for the project
    - C: share of capital that the company has;
    - R1: specific share of risk linked to the capital;
- Q x R2: refers to the share of risk related to the quality of the product
    - Q: quality of the product;
    - R2: specific share of risk linked to the quality of the product;
- E x R3: refers to the share of risk related to the company's experience
    - E: the experience of the company:
    - R3: specific share of risk linked to the firm's experience.

Thus, for example the share of risk related to the invested capital of a large company will be lower than that of a small company. A small company should act prudently, because it does not have the same capital endowment of a large company. Therefore, the failure of an investment could threaten the survival of the organization. In this sense, large companies are able to face this problem with less fear of making mistakes. Often, the weight of C x R1 is so heavy that small companies abandon the idea of entering with a WFOE strategy in the Chinese market, preferring other entry modes such as exporting, licensing and franchising. On the other hand, although small companies have to bear a very high share of risk related to the capital, they can balance the high value of C x R1 with a low value of Q x R2. In other terms, if small companies are able to penetrate the Chinese market with a high-quality product or service, the share of risk associated with the quality of the product will be lower. Thus, Q x R2 compensates C x R1.

Another consideration to make is that, sometimes, small companies enter the Chinese market at the request of their European and American customers who have plants in China. Therefore, small Italian companies start exporting to China

products to their customers established there; and then they gradually acquire Chinese customers. Thanks to this process, when small companies enter the Chinese market, (suppling their European and American customers) they have to bear a small share of risk related to the experience.

Although they are not specifically expressed in the formula, interdependences exist between the three factors mentioned above. (CxR1, QxR2, ExR3). For example, a company with a lot of experience may also be better in providing quality products. Thus, the share of risk related to the company's experience will be low, exactly like that related to the quality of the product. Therefore, it would be very interesting and useful to examine the existing correlations between these three factors.

This chapter provided a description of the factors that influence the Chinese market entry mode. All the drivers that have been considered have been grouped in three categories: the capital that the company has for its project, the perception of the quality of the product in the market, and the company's experience and the knowledge of the market. These three elements have been used to build a formula that indicates what a company's risk may depend on.

CHAPTER 4: EMPIRICAL EVIDENCE

In order to verify the concepts expressed in the previous sections, this last chapter aims at providing an empirical evidence. China is a very attractive destination for many Italian companies; and this chapter deals with an analysis of some real Italian companies that decided to implement an investing strategy in the Chinese market. According to their market entry modes it is possible to explore which obstacles they had to overcome, and which were the economic and financial advantages that the entry strategies have brought to them.

4.1 The Companies Involved in the Research

All the companies involved in this research study belong to the same industry, i.e. the rubber industry.

In Italy resides a very interesting rubber industry. Its life started around the fifties of the twentieth century when the Italian economy, after the Second World War, lived its economic miracle. After the economic crisis of 2008, only the companies that have maintained high-quality standards, that have continued to innovate in order to meet the needs of customers with the lowest possible prices and the lowest margin of error, survived the difficult period of recession. The center of Italian rubber industry is located in the North of the country, in Bergamo. One of the secrets of the success of this geographical area probably lies in the fact that in the immediate proximity it is possible to find all that is necessary for the production of rubber articles. All the essential elements are available to the companies: from the realization of the compound and of the mold, through the production with a relevant automation for the process, up to the deburring and the quality testing machineries. This way a unique network, from which all companies benefit, has arisen.[53] Organizations of this area supply internationally renowned companies

[53] "L'industria della gomma in Italia", 2016, www.maplan.at

with their rubber articles in all industrial sectors, from construction industry to the hydraulic one, from the electrical appliances to the valves, from aerodynamics to the food industry, from the energy industry to the automotive one. For this reason, the so-called 'rubber valley' in Bergamo can boast the European leadership in the production of rubber gaskets. The success of these companies was built through a seemingly simple product, which nevertheless represents a critical component for many productions. Thus, in order to be accepted by the greater global manufacturers, their products are subject to rigorous controls and continuous quality tests.

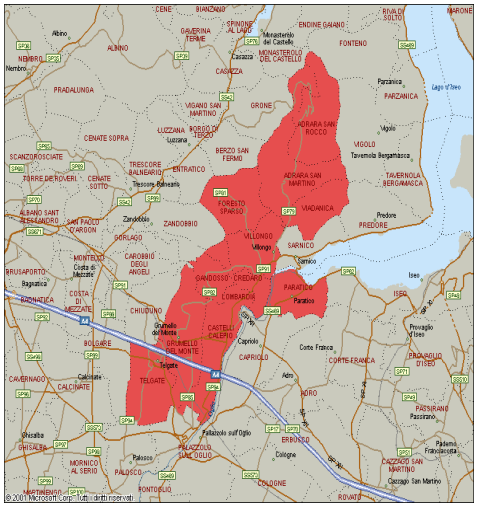

The so-called 'Rubber Valley'

Source: unioncamerelombardia.it

This rubber district counts around two hundred companies, guarantees work to over 4,500 people and bill €2.5 billion, with an export of more than €430 million. According to the Presentation of the tenth Annual Report of Intesa San Paolo, in 2017, this district ranked second among the best Italian districts for growth and profitability, with a total score of 81,5 (minimum = 0; maximum = 100).

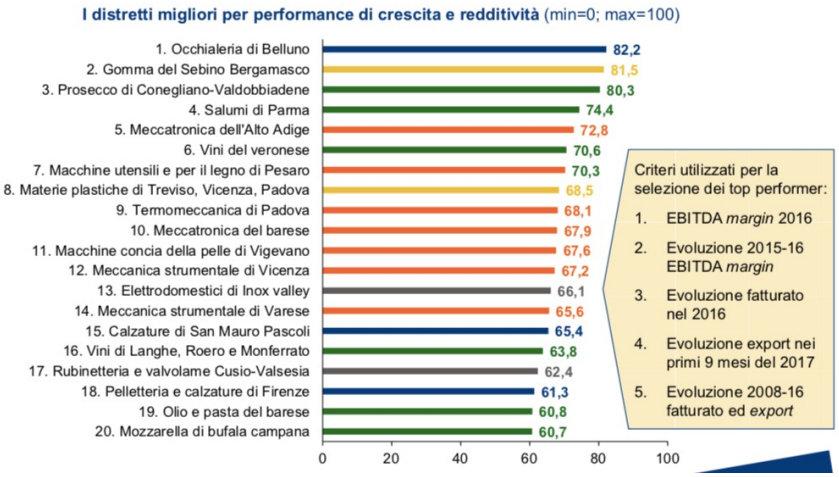

Performances of Italian Districts

Source: Presentation of the tenth annual report, Intesa San Paolo, 2018.

For this case study five Italian companies (all located in the 'rubber valley') have been analyzed; and we refer to these companies as company A, company B, company C, company D, and company E.

Company A is a group which has specialized in the production of gaskets for industrial applications; and is one of the largest companies of the 'rubber valley'. The expertise in rubber processing of this company, whose origins date back to the sixties of the twentieth century, has grown over time. Technology and research are the constant factors that led to a remarkable development of the company that began the first integrated production processes. Through the collaboration with leading companies in the automotive sector and in that of sanitary systems, electrical appliances and plumbing and pneumatic systems, it was possible to expand the company. At that time, the acquisition of external companies also began, and the group was founded. Today the group consists of eleven companies both in Italy and abroad and boasts almost 1600 employees worldwide. The production and sales network currently covers all strategic areas at international level. The group is not only able to run the entire production sector in each processing phase of the product, but is also able to rule the market, controlling the trends and grasping any opportunity of development. Its work philosophy aims not

only at simple innovation (that already represents modernity and functionality), but also at advanced innovation, symbol of efficiency, quality, and reliability. Focusing on the knowledge of the market, the implementation of advanced technology, and providing a personalized and high-level service, the company tries to meet the costumers 'need. In order to improve, expand the business, constantly grow and ensure high-quality products, the group has implemented a significant investment policy and has reached a global open-mindedness.

For years, the company has been exporting to China rubber molded articles (technical articles and O-Rings) through a direct exporting strategy.

Company B is a small (but modern) company that was founded in the second half of the eighties with the sole production of metal jacked gaskets; but some years later it decided to improve by expanding the product range. Therefore, today it manufactures any kind of gaskets; and petrochemical equipment is its present core business. Thanks to its dynamic and lively approach to the markets, the company grew up very fast in terms of turnover and number of employee. The company's good-value products allow it to act both locally and internationally, thus selling gaskets throughout Italy and abroad. About ten years ago, the company started to export to China industrial seals. The company decided to entry the new market through an indirect export strategy, using both agents and distributors.

The firm believes in the importance of continuous research for up-dated construction materials in order to have increasingly better performances. Company B applies a quality-oriented way of working and it is also able to manufacture products according to the customers' requests.

Company C is a small company that started its activity in the rubber industry during the seventies of the twentieth century. Its production has always focused on seals and sealing rings for valves, pumps and systems. The supplies of the company mainly concern the chemical and petrochemical sectors, and high pressure and high temperature systems.

This company opted for a direct export entry mode for the Chinese market and exports five percent of total production to China. The number of its Chinese customers is limited, and it sells them only gasket seals.

The company's greater strengths (that allowed it to stay competitive although its small dimension) are the product quality, the customer service and the speed of delivery.

The corporate culture is focused on the concept of quality; and the attention paid to this aspect of production has led to an increase in sales not only in the Italian market, but also in the Chinese one. Regarding customer service, the technical office of the company is able to provide consultations on the applications and on the technical characteristics of the materials and the gaskets produced, reaching solutions for particular uses and problems of application. The speed of production and delivery are a hallmark of the modus operandi of this company. In this sense, exporting directly to China can lead to the weakening of this aspect. Given the distance and the difficult management of the bureaucracy related to delivery, the timing is certainly longer. Nevertheless, the company always tries to respect the delivery times agreed with its customers.

Company D, starting from the second half of the seventies, boasts its presence in the national and international rubber market. It projects and sells O-rings, sealing, and high-quality technical articles. The firm is a small-sized one and has more than two hundred customers all over the world which work in the following fields: automotive, household appliance, hydraulic, gas, pneumatic, electronic and medical. Providing customers a qualified product and a professional service, the company is one of the main players of the 'rubber valley'. Through forefronts technologies, the engineers of the company monitor the development of every project in all its phases.

About ten years ago, the company decided to expand the business and to export directly to China products used in the automotive, hydraulic and heating sectors. Nowadays, this firm exports two percent of its turnover to China, for a value of €500.000 per year. In the future, the company is motivated to establish a

whorehouse with sales office in China for the management and the growth in the Chinese market or to start a joint venture with a Chinese partner. The establishment of a new Chinese plant will be considered when the company will be able to reach a turnover of €2 millions in China; while the project of a JV will be possible when the company will find the ideal Chinese partner. The success of this company in the Chinese market is due to its high-quality products (completely 'made in Italy'), a big productive flexibility and reduced lead times. The firm aims at reducing at the minimum the margin of error, check 100% of its production and use certified raw materials. This focus on the quality of its product allows the firm to be a major plyer in the European rubber market and a competitive company in the Chinese one.

Company E is another firm of the 'rubber valley' that started its operations about thirty years ago. The activity of this company consists in the co-design, production, and sale of technical and design items in elastomeric materials, mainly destined to the automotive, hydraulic, pneumatic, heating, household and industrial sectors. The company entered the Chinese market with a direct exporting strategy and the key of its success in such a difficult market is to export not only standard articles (that could be freely traded as they can be used in various sectors), but also items specifically commissioned by the customer, that only that specific customer can use. The company exports to China around 4/5 % of its total production, for a turnover of €400.000 per year. The primary objective of this firm is the customer satisfaction, which is achieved through the creation of a partnership based on collaboration, mutual trust, and continuous support. Moreover, the company aims at offering the best service available on the market, both in terms of product quality and in terms of customer service. The customer service deals with the management of the orders and the programs received from the customers, the supervision of the production process, and the after-sales service.

All these companies can be classified as small companies. As stated in the previous pages, despite large companies still have to face a lot of challenges, however they

have much more resources to minimize the risks. Nevertheless, also small companies, through a proper path, may gain some benefits and increase their value.

4.2 Methodology

This section of the chapter aims at explaining the methodology that has been used to collect the information about the companies involved in the research.
Being Bergamo my hometown, it was quite easy for me to get in touch with some of the 'rubber valley' companies. From March to August 2018, I collected data and information on the entry modes of the involved companies directly from their operational managers. All the information was collected using the interview method. Companies were asked to provide a brief presentation of the company's activities in general and then focusing on the operations concerning China. All the questions were aimed at finding out how the company decided to enter the Chinese market, the way of the Chinese market entry mode, the obstacles and challenges the company faces, and the benefits the organization enjoys. In addition, the interviews deepened the important issues of competition and after-sales service.
The results of the surveys are shown in the following paragraph.

4.3 Findings

All the companies involved in this case study opted for an exporting strategy to enter the Chinese market. Only one of them (company B) exports indirectly to China using agents and distributors; while all the others export their products in a direct way. The decision of the company to export through agents and distributors is due to the company's intention to increase sales volume and the number of customers in the Chinese market. Since this firm does not have a good knowledge of the Chinese market and does not have the right contacts to push the sales of its product, the indirect export entry mode was considered the best solution to these problems.

On the other hand, the remaining four companies prefer to export directly to China. The choice to use this entry mode is justified by a phenomenon in which all of them have been involved. At the beginning, these companies were not intentionally willing to face the different and complex Chinese market. Making an investment in China implies spending a lot of time in understanding how to gain a profit in a continuously changing environment, requires a good knowledge of the customers and of the competitors that the company will have to face and means collect market data. To do all this, companies need time and resources. All the companies considered in this research are small companies; therefore, they cannot enjoy resources that would allow them the adequate preparation to enter the Chinese market. These companies initially entered the Chinese market at the request of their American or European customers who have plants on the Chinese territory; and only later they succeeded in expanding their business by acquiring Chinese customers. This is a factor of crucial importance: probably, without the request of their original customers (the American and European ones), these small rubber companies would not even start exporting to China. They would have perceived the lack of knowledge of the Chinese market as a risk too high to bear. These companies started exporting in China to safeguard their positive image in the eyes of the customers who specifically made this request. One of the main problems encountered by all these rubber companies is certainly the difficulty in managing bureaucracy related to exports. In order not to lose the original customers, these Italian firms have been forced to manage this issue. However, once they discovered the way to overcome this obstacle, these companies found a clear path to reach also Chinese customers.

The fact that all the companies involved in this research have chosen the exporting strategy to enter the Chinese market is certainly not fortuitous. All of them are small companies; therefore, given the scarcity of their resources (especially capital resources), their margin of error is much lower than that of a large company. A large and a small company do not have the same capital endowment; and entering the Chinese market through a WFOE may be too risky for a company with limited

resources, it may not be financially sustainable. From a small company point of view, a wrong investment can call into question the survival of the firm. It is for this reason that these Italian companies considers exporting as the most suitable strategy to enter the Chinese market.

For the time being, almost all of these companies are willing to continue on this line; only one of them (company D) intends, in the future, to start a JV with a Chinese partner or to open a sales office in China.

The key of success of all these companies is to penetrate the Chinese market with high-quality products. Indeed, these Italian companies do not export only standard articles (that can be easily found on the Chinese market); but also, specialized products specifically designed for the Chinese customers. The large size of the Chinese market implies a really strong competition, both local and foreign. The Chinese competition is very strong in economic terms; this is mainly due to the low costs of labour and of the raw material used. However, local suppliers are not able to guarantee the same quality standards of the Italian firms. These companies' philosophy to face the competition is to produce high-quality technical articles in special materials that, currently, Chinese companies are not able to produce with satisfying results. Chinese competitors can be currently found in market segments in which technical requirements are lower (for example for sanitary taps); while when the technical requirements are higher, foreign competition becomes stronger. Given their small size, the companies involved in this study often suffer from the presence of more structured foreign companies. Moreover, the high-quality standards of the products of these companies, allow them to raise sales prices and consequently to have higher profit margins. Having good profit margins help to compensate for the limited sales volumes (in China) of these small companies. The sales quantities should be such as to allow shipments with the maximum volume of load and consequently at the minimum price (generally, it is about filling the containers).

Furthermore, if the company also provides after-sales service, the perception of the quality of the products increases. Since the success of the Italian companies

taken into consideration depends on the peculiarity of their products, all of them have decided to provide after-sales service both to original customers (the American and European ones) and Chinese customers. The after-sales support provided by the companies is of technical and qualitative nature. These companies guarantee the quality of the products; and, at any stage of the delivery or assembly process, provide technical support for the resolution of the problems encountered by the customers. If the problems cannot be solved, the supply can be replaced. If necessary, some of these companies also offer on-site assistance. Naturally, the great disadvantage of exporting as market entry mode is the distance that separates Italy from China. First of all, technical assistance to the customer can be difficult because sometimes, in case of problems, it is not enough to use modern communication technologies to understand and solve the situation; (surely, even the linguistic and cultural difference does not help communication). Second, export costs are expensive compared to the costs that companies have to bear for export to Europe, and this has an obvious impact on the prices of the items. Last, the time-frame for delivery is very long; this is because most of the exports are made by sea. Nevertheless, all these companies try to fight the competition respecting the delivery times negotiated with the customers. From this point of view, having a plant in China would be a significant advantage.

According to the formula provided in the third chapter of this study, the company's total risk is the result of the sum of the share of risk related to the investment capital (C x R1), the share of risk related to the product's quality (Q x R2), and the share of risk related to the company's experience (E x R3). The image below will provide a clearer comprehension of the link between this formula and the Chinese market entry mode selected by these companies.

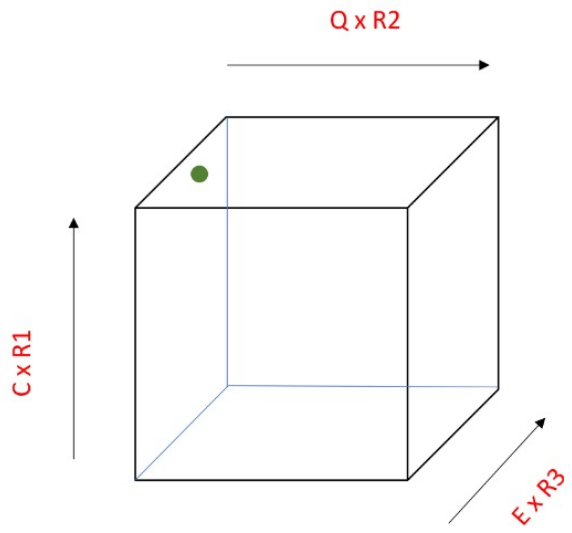

The green point in the cube indicates the position of the companies involved in this research.

This image shows that these companies are characterized by a low share of risk related to the quality of their product, a medium level share of risk related to their experience and a high share of risk related to their capital. On the basis of such elements, these Italian companies have opted for an exporting strategy to enter the Chinese market. These companies perceive C x R1 so high that the establishment of their own branches on the Chinese territory is considered a step too far. One of the five companies intends, as soon as its capital availability increases, to open its own branch or to start a joint venture with a Chinese partner. This shows that a greater availability of capital and a lower share of risk related to it may lead a company to feel able to manage such risk and to choose entry modes different from the exporting one.

This last chapter provided some examples of Italian companies that have decided to enter the Chinese market. Considering the small size, the limited resources, the insufficient knowledge of the Chinese market, and the product quality, the entry

mode that has been chosen by these companies is the exporting strategy. This entry mode has allowed them not to expose to the risk of a non-financially sustainable investment, but at the same time has led them to face challenges and obstacles related to the great distance that separates Italy and China.

CONCLUSIONS

The role of China has been rising rapidly over the past decades and, in the eyes of foreign companies, it represents a very attractive investment destination. Therefore, as the title of this thesis suggests, the first objective of this study was understanding the ways in which such companies can enter the Chinese market. The first chapter provided an overview of the main entry strategies: direct and indirect exporting, licensing and franchising, wholly foreign-owned enterprises (WFOE), joint ventures (JV) and using Hong Kong as entry to mainland China.

The exporting strategy is generally the first step taken by a company to start its internationalization operations. This entry mode does not require a high initial investment, but at the same time it does not allow the company to exercise a full control over the company's operations. On the contrary, using a WFOE to penetrate the Chinese market means bearing a high initial investment, but enjoying entire control on the business activity. This last strategy also grants the company to protect its intellectual property. A company's specialized technology or know-how may increase the value of the company; and the non-protection of this value can lead the company to lose its competitive advantage. This is one of the biggest risks that companies using a joint venture strategy will have to face: the company runs the risk that the Chinese partner may steal its intellectual property. Therefore, a JV presents a higher risk exposure to Intellectual Property Rights infringement. On the other side, having a Chinese partner can facilitate the foreign company to do business in a completely different context.

Using Hong Kong as entry to mainland China is another interesting strategy. The main reason why some companies use this strategy is the high attractive tax regime of Hong Kong. Its tax rates are, in fact, much lower than the Chinese ones. Therefore, the second chapter of this study provided an analysis of the two tax systems.

Doing business in China means also dealing with a currency different from the European one; thus, Italian companies operating in China will also have to face the foreign exchange risk. The changes of the exchange rates over time produce a strong impact on the financial performance of the company, which may have profits or losses. The foreign exchange risk should be carefully considered from the design phase of the organizational structure; and a company should aim at keeping within it only those risks that is able to manage. The second chapter demonstrates how the choice of the Chinese market entry mode, which is a purely strategic decision, also has implications on the financial management of the company.

The third chapter of this thesis deals with specific factors that drive investments in China. The first drivers that have been considered are the management risk attitude and the company's experience. Without sufficient experience and knowledge, there tends to be a greater sense of risk and uncertainty, which may constrain at least the subjective, if not the objective, freedom of choice of market entry modes. Competition is another relevant factor that foreign companies investing in China have to consider. Before entering the Chinese market, such companies have to decide how to face local and foreign competition. Three main strategies are involved: increase profits by reducing costs (becoming the leader in terms of costs); make the product or service more attractive than those of the competitors; and focus on niche markets. Profit margin and sales volume are two other interesting drivers in deciding whether to invest or not and in selecting the most suitable market entry strategy. The aim of every business owner is to make profits; thus, before entering the Chinese market, companies should forecast which will be the expenses and the revenues related to their projects. Two main approaches are involved in the forecast process: the conservative case and the aggressive one. Naturally, the aggressive approach is much riskier than the conservative reality. Moreover, sales volume has very direct and significant effect on the company's profit-earning potential; thus, estimating sales volume is fundamental.

To achieve success in the Chinese market, foreign companies have also to pay a lot of attention to the level of satisfaction of their Chinese customers. In order to increase the level of satisfaction, companies often provide an after-sale service. Providing a good after-sale service may generate loyal customers; and a satisfied client can also bring more revenues to the company.

Obviously, among the factors that influence the market entry strategy, the company size deserves to be mentioned. A company willing to invest in a new market should evaluate if sufficient recourses are available to implement its strategy. Thus, large companies may have access to resources that are denied to small firms. The resource scarcity (particularly the capital resource scarcity) may have a negative impact on the availability of options of small companies to enter a foreign market. This does not mean that small companies will not reach positive results; on the contrary, since a small firm has limited resources, it often pays more attention to its investment operations. It will have to overcome a lot of obstacles; but, for example, providing a high-quality product it may compensate its lack of resources. Additionally, the amount of uncertainty that a company is willing to accept has to be considered in investment decisions. Large companies tend to be less risk averse than small ones; this is due to the fact that the organizational wealth leads the company to take more risky projects.

It is important to stress that every company differs from the others; thus, a unique investment project suitable for all companies does not exists. Therefore, assessing the company's risk tolerance, selecting the risks that the company wants to bear and operating with benchmark is fundamental.

All the drivers mentioned above have been grouped in three main areas: the capital availability of the company for a specific project; the perception of the quality of the company's product in the market; and the company's experience in foreign markets. These three elements have been used to build a formula to calculate the risk that a company will have to bear. According to this formula, the total risk of the company is the result of the sum of the share of risk related to the invested capital, the share of risk related to the quality of the product and the share of risk

related to company's experience. It is clear that the large company' share of risk related to the capital will be lower than that of a small firm. However, the small firm, reducing the share of risk related to the product quality can compensate the high share of risk related to the capital. Often small companies do not have significant experience in foreign markets, thus their share of risk related to the experience will be quite high. However, thanks to the analysis of some small Italian companies it was possible to understand how such companies reduce this type of risk. Indeed, the last chapter of this thesis provided examples of how some Italian companies (which operate in the rubber industry) face the Chinese market. These companies entered the Chinese market at the request of their American or European customers who have plants on the Chinese territory. Since these Italian companies provide not only standard, but also specialized high-quality products, the American and European customers want these company to supply them. Thus, the companies involved in this study first entered the Chinese market selling their products to their original customers, and later they acquired new Chinese customers. This way, such companies were able to avoid a high share of risk related to the experience.

All the companies that have been considered in this research decided to enter the Chinese market with an exporting strategy. There are two main reasons explaining this phenomenon: the first is related to the company size. Their limited availability of resources does not allow them to enter the market with a WFOE because it would not be financially sustainable. The second is related to their sales volumes, which are not so high to consider different entry strategies.

BIBLIOGRAPHY

Agarwal, S. & Ramaswami, S.N., "Choice of Foreign Market Entry Mode: Impact of Ownership, Location and Internalization Factors", *Journal of International Business Studies*, first quarter 1992, pp. 1-27.

Aren Selim, Zengin Asiye N., "Influence of Financial Literacy and Risk Perception on Choice of Investment", Procedia- Social and Behavioural Sciences 235, 2016, pp. 656-663.

Bertinetti G., "Finanza Aziendale Internazionale: verso un approccio manageriale per la gestione del rischio di cambio", G. Giappichelli Editore, 2006.

Bertinetti G., "International Finance and Banking", McGraw-Hill Education, 2017.

Bontempi M.E., Prodi G., "Entry Strategies into China: The Choice Between Joint Ventures and Wholly Foreign-Owned Enterprises: An Application to the Italian Manufacturing Sector", *International Review of Economics and Finance*, 18, 2009, pp. 11-19.

Buckley P.J., "Foreign Direct Investment by Small-and-Medium-Sized Enterprises: the theoretical background, in P.J. Buckley, P.N. Ghauri (Eds.), *The internationalization of the firm: a reader*, Academic Press, 1993, pp.91-106.

Caves R.E., "Multinational Enterprise and Economic Analysis", Second Edition, Cambridge University Press, 1999.

Cespedes Frank V., “Control vs. Resources in Channel Design: Distribution Differences in One Industry”, *Industrial Marketing Management*, 1988, No. 17: 215-227.

Chan K. Hung, Chow Lynne, “International Transfer Pricing for Business Operations in China: Inducements, Regulation and Practice”, *Journal of Business Finance and Accounting*, 1997, pp. 1269-1289.

Cooper A.C., Gimeno-Gascon F.J., Woo C.Y., “Initial Human and Financial Capital as Predictors of New Venture Performance”, *Journal of Business Venturing*, Vol 9., 1994, pp. 371-395.

Dass P., “Relationship of Firm Size, Initial Diversification, and Internationalization with Strategic Change”, *Journal of Business Research*, Vol. 48, 2000, pp.135-146.

Dentons, “Bilingual Version of Bulletin 6”, 2017, available at: https://s3-eu-west-1.amazonaws.com/3eeb8fe9-6553-11e7-b33e-0287636382f5/ae03c317-ae6a-11e7-b33e-0287636382f5/upload/0sb9cpts69vwxk4go8dyx3jdlhxlibub/170509-bulletin-6-translation.pdf.

Dong T., Duan D., Zhang A., Bai X., “Transfer pricing in China: overview”, 2017, available at: https://uk.practicallaw.thomsonreuters.com/w-007-8954?transitionType=Default&contextData=(sc.Default)&firstPage=true&comp=pluk&bhcp=1.

Dubinsky A.J., Ingram T.N., “A Portfolio Approach to Account Profitability”, *Industrial Marketing Management*, 13, 1984, pp.33-41.

Dunning John H., “Toward an Eclectic Theory of International Production: Some Empirical Tests”, *Journal of International Business Studies*, Vol. 11, No. 1, Spring-Summer, 1980, pp.9-31.

Eales B.A., “Financial Risk Management”, McGraw-Hill Book Company Europe, 1995.

EU SME Centre, “Are you ready for China? Ways to enter the Chinese market Report 2”, 2015, Available at: http://www.eusmecentre.org.cn/report/ways-enter-chinese-market.

Ernst & Young EY, “China’s New Transfer Pricing Compliance Requirements: Impact on Foreign Headquarters”, 2016, available at: https://webforms.ey.com/Publication/vwLUAssets/EY-china-tp-alert-new-transfer-pricing-compliance-requirements/$FILE/EY-china-tp-alert-new-transfer-pricing-compliance-requirements.pdf.

GWA, “Chinese Tax System- Overview”, available at: http://www.greatwaylimited.com/admin/upload/China'%20s%20tax%20system%20Overview.pdf.

Guo Weizhen 郭维真, “Xin qiye suodeshui fa de gongping yu xiaolü” 新企业所得税法的公平与效率, *International Taxation in China*, 2007, pp. 33-37.

Hill C.W.L., Hwang P., Kim W.C., “An Eclectic Theory of the Choice of International Entry Mode”, *Strategic Management Journal*, Vol. 11, No.2 (Feb., 1990), pp. 117-128.

Howard R.A., “Decision Analysis: Practice and Promise”, *Management Science*, Vol. 34, No. 6, 1988, pp. 679-695.

InterChinaConsulting, “Establishment of a Joint Venture (JV) in China”, June 2011, available at:https://www.caixabank.es/deployedfiles/particulars/Estaticos/PDFs/InfolineaAbierta/JVinChina.pdf.

Jianxiong, Zhai, “Tax Legislation of the People’s Republic of China and its Information Sources”, *Revenue Law Journal*, Vol. 8, Iss. 1, Article 10, 1998.

Johansson J.K., “Global Marketing: foreign entry, local marketing and global management”, Times Mirror Higher Education Group, 1997.

Johnson J., Tellis G.J., “Drivers of Success for Market Entry into China and India”, *Journal of Marketing*, Forthcoming, Marshall School of Business Working Paper No. MKT 10-07, 2007.

Koch A.J., “Factors Influencing Market and Entry Mode Selection: developing the MEMS model”, *Marketing Intelligence & Planning*, Vol 19, Issue 5, 2001, pp. 351-361.

KPMG, “China Tax Alert”, 2018, available at: https://assets.kpmg.com/content/dam/kpmg/cn/pdf/en/2018/03/china-tax-alert-09.pdf.

Li Ling-yee, “An Examination of the Foreign Market Knowledge of Exporting Firms Based in the People’s Republic of China: Its Determinants and Effect on Export Intensity”, *Industrial Marketing Management* 33, 2004, pp. 561-572.

Lasserre P., “Global Strategic Management”, Third Edition, Palgrave Editor, 2015.

Liu Lei 刘磊, “Xin qiye suodeshui fa shishi yu qiye shuishou zhanlüe de tiaozheng” 新企业所得税法实施与企业税收战略的调整, Corporate Finance, 2009, pp. 35-37.

Lo Agnes W.Y., Wong Raymond M.K., “An empirical study of voluntary transfer pricing disclosures in China”, *Journal of Accounting and Public Policy*, Vol. 30, No. 3, 2011, pp. 607-628.

Maplan, “L’industria della gomma in Italia”, *The Elastomer Injection Technology Report*, 2016.

Mariotti J., “Selling More for Less or Selling Less for More?”, Forbes, 2011, available at: https://www.forbes.com/sites/prospernow/2011/01/21/selling-more-for-less-or-selling-less-for-more/#6fcf46ab5444.

Niu Y., Dong L.C., Chen R., “Market Entry Barriers in China”, *Journal of Business Research*, 65, 2012, pp. 68-76.

Pan Y., Chi P.S.K., “Financial Performance and Survival of Multinational Corporations in China”, *Strategic Management Journal*, Vol. 20, No. 4, Apr. 1999, pp. 359-374.

Porter M., “Competitive Advantage: creating and sustaining superior performance”, The Free Press, 1985.

PwC, “Investire in Cina, Hong Kong e Singapore” (on line article), available at: http://www.assolombarda.it/servizi/internazionalizzazione/documenti/presentazione-a-brignoli.

PwC, "Hong Kong enacts new BEPS and transfer pricing law" (on line article), available at: https://www.pwc.com/gx/en/tax/newsletters/pricing-knowledge-network/assets/pwc-tp-hk-beps-tp-law.pdf, 2018.

RIMS Executive Report, "Exploring Risk Appetite and Risk Tolerance", 2012, available at: https://www.rims.org/resources/ERM/Documents/RIMS_Exploring_Risk_Appetite_Risk_Tolerance_0412.pdf.

Rhyne, D.B.A., William J., "Entering the Global Market Place of the 21ST Century: Strategies, Risks, and Modes for International Expansion of Chinese Businesses", UC Davis Graduate School of Management Research Paper No. 13-09, April 2009, available at: http://ssrn.com/abstract=1373935.

Ruzzier M., Konecnik Ruzzier M., "On the Relationship Between Firm Size, Resources, Age at Entry and Internationalization: The Case of Slovenian SMEs", *Journal of Business Economics and Management*, Vol. 16, No.1, 2015, pp.52-73.

Shim J.K., Siegel J.G., Shim A. I., "Budgeting basics and Beyond", Fourth Edition, John Wiley & Sons. Inc., 2011.

Tse David K., Pan Yigang, Au Kevin Y., "How MNCs Choose Entry Modes and Form Alliances: The China Experience", *Journal of International Business Studies*, Vol 28, No. 4, 4TH Qtr., 1997, pp. 779-805.

Vozza A, "Tassazione delle Imprese Straniere in Cina", Fiscalità Internazionale (on line article), URL: http://www.leggicinesi.it/dottrina/VOZZA_Tassazione_%20imprese_straniere.pdf, 2006.

Walls M.R., Dyer J.S., “Risk Propensity and Firm Performance: A Study of the Petroleum Exploration Industry”, *Management Science*, Vol. 42, No. 7, 1996, pp. 1004-1021.

Yan Xu, “No Taxation without Representation: China’s Taxation History and Its Political-Legal Development”, *Hong Kong Law Journal 515*, 2009, pp. 1-21.

Yang Yanping 杨燕萍, “Tongyi newaizi qiye suodeshi de tantao” 统一内外资企业所得税的探讨, *Journal of Guandong College of Finance and Economics*, 2005, pp. 15-19.

Zamborsky P., “International Business and Global Strategy”, First Edition, 2016.

SITOGRAPHY

Accounting Tools, https://www.accountingtools.com/articles/what-is-sales-volume.html

Camera di Commercio Italo Cinese, http://www.china-italy.it/it/pubblicata-la-bozza-di-legge-sul-transfer-pricing

Corporate Finance Institute, https://corporatefinanceinstitute.com/resources/knowledge/finance/operating-profit-margin/

Enterpreneur, https://www.entrepreneur.com/article/76418

Guide Me Hong Kong, https://www.guidemehongkong.com/business-guides/supporting-a-business/hong-kong-profits-tax-guide,https://www.guidemehongkong.com/business-guides/supporting-a-business/hong-kong-withholding-tax-guide

International Trade Centre, http://www.intracen.org

Intesa San Paolo, https://www.group.intesasanpaolo.com/scriptIsir0/si09/contentData/view/content-ref?id=CNT-05-00000004FDE95

Invest in China, http://www.fdi.gov.cn/1800000121_39_3339_0_7.html

Investopedia, https://www.investopedia.com

Leggi Cinesi, http://www.leggicinesi.it/default.asp

Management Study Guide, https://www.managementstudyguide.com/after-sales-service.htm

News Mercati, http://www.newsmercati.com/Il_Transfer_Pricing_in_Cina

Organisation for Economic Co-operation and Development, http://www.oecd.org/ctp/transfer-pricing/

PwC, http://taxsummaries.pwc.com/ID/Peoples-Republic-of-China-Corporate-Withholding-taxes

S.J. Grand, https://www.sjgrand.cn/value-added-tax-vat-foreign-companies-china/

The World Bank Group, https://data.worldbank.org/indicator/NY.GDP.MKTP.CD

Trading Economies, https://tradingeconomics.com/china/balance-of-trade

Unioncamere Lombardia, http://www.unioncamerelombardia.it/?/home

WFOE Organization: Wholly Foreign Owned Enterprise (WFOE), http://www.wfoe.org/

ABBREVIATION LIST

APA	Advance Price Agreement
BEPS	Base Erosio and Profit Shifting
CBC	Country-by-Country
CEPA	Closer Economic Partnership Arrangement
CJV	Cooperative Joint Venture
COGS	Cost of Good Sold
EITL	Enterprise Income Tax Law
EJV	Equity Joint Venture
ERM	Enterprise Risk Management
FICE	Foreign-Invested Commercial Enterprise
GDP	Gross Domestic Product
GNP	Gross National Product
IPR	Intellectual Property Rights
IRO	Inland Revenue Ordinance
MOF	Ministry of Finance
MOFCOM	Ministry of Commerce
OECD	Organization for Economic Cooperation and Development
PRC	People's Republic of China
RMB	Renminbi
SAFE	State Administration of Foreign Exchange
SAR	Special Administrative Region
SAT	State Administration of Taxation
SME	Small and Medium-sized Enterprise
VAT	Value-Added Tax
WFOE	Wholly Foreign-Owned Enterprise
WTO	World Trade Organization

GLOSSARY

English	Pinyin	Chinese
Bohai Bay	Bohai wan	渤海湾
Cooperative Joint Venture	zhongwai hezuo jingying qiye	中外合作经营企业
Duty-free Districts	baoshuiqu	保税区
Economic and Technological Development Zones	jingji jishu kaifaqu	经济技术开发区
Enterprise Income Tax Law	qiye suode shuifa	企业所得税法
Equity Joint Venture	zhongwai hezi jingying qiye	中外合资经营企业
Export Processing Zone	chukou jiagongqu	出口加工区
Ministry of Finance	caizhengbu	财政部
Open Cities	kaifang chengshi	开放城市
Pearl river delta	Zhujiang sanjiaozhou	珠江三角洲
Relationship	guanxi	关系
Special Economic Zones	jingji tequ	经济特区
State Administration of Taxation	guojia shuiwu zongju	国家税务总局
Yangtze river delta	Changjiang sanjiaozhou	长江三角
Wholly Foreign-Owned Enterprise	waishang touzi jingying qiye	外商投资经营企业